ADVANCE VALVES

Changing the way you think about valves

advancevalves.com

CONCENTRIC
Butterfly Valves



SERIES BF

An Integrally Moulded Liner Design

ENGINEERED FOR PERFORMANCE



EXTENDED STEM | ACTUATED VALVES | BURIED SERVICE

008 0062 LISTED

More than 4 Decades

Design Features

Advance Concentric Butterfly Valves are designed and manufactured to have optimal mix of structural stability, flow efficiency and effective seating coupled with advantage of light weight, compact design and ease of operation. Only a quarter turn is needed to fully open or close the valves.

The valves are provided with integrally moulded elastomer body liner to provide perfect seating and complete isolation of body material from media to prevent it from any corrosive and abrasive impact of fluid. The body liner material can be provided to suit specific fluid service for long maintenance free life.

The valves are easy to install in any position between horizontal to vertical piping. No gaskets are required as the body liner acts as a seal between the valves body and the mating pipe flanges.

Standard Wafer Valves are available from NPS 2-24 and require only one set of mating flanges, as otherwise required for flanged valves. They also required only one set of studs and nuts instead of two sets required for flanged valves. They thus save installation time and cost.

Lugged Type Valves are also available in all sizes up to NPS 24 as per requirement.

Double Flanged Type Valves are also available in all sizes. These are with API 609 Cat B face to face and flanges as per ASME B 16.5 being fully ASME CL 150 rated like the valve seats.

Advance Butterfly Valves are maintenance free 'FIT & FORGET' Valves.

Pressure & Temperature Ratings

Advance Butterfly Valves are available in following pressure ratings:

SL. No.	BS-5155	IS-13095	API-609
1	PN-10	PN-1.0	-
2	PN-16	PN-1.6	ASME CL 125
3	PN-20	PN-2.0	ASME CL 150

Temperature Range: - 57° C (-70° F) to 204° C (400° F) depending on Body Lining (Seal) material.

Standard Compliance

Advance Butterfly valves conform to BS: 5155, IS: 13095 and also API 609. They also generally comply with AWWA C-504, ISO 10631 and EN 593.

High Performance Double Eccentric and Triple Eccentric Butterfly Valves are also available in size from DN 80 (NPS 3) to 3 mtr. (NPS 120) with model pressures rated form 10 bar (PN 10) to 160 bar (ASME CL 900) and in wafer, lug-type and flanged configurations.

Elastomer seal valves operate on the double offsset principle and rated upto 25 bar. Pressures of upto 160 bar (ASME CL 900) can be achieved by metal seated valves operating on the triple offset design principle. For further information, refer our website or the other catalogue.

Valve Operators

1. Manual (Hand Lever Operated):

As a standard practice, valves of size DN 50 (NPS 2) N.B. to DN 200 (NPS 8) N.B., depending on pressure class, are provided with self-locking lever operation from open to fully closed position with eight intermediate positions marked on the indicator plate mounted on the top flange.

2. Manual (Gear Operated):

Larger size Valves are provided with a quater turn worm gear box of reputed make with adequately size handwheel for low torque and smooth operation.

Valves of smaller sizes can also be provided with gear operator on specific enquiry.

The Handwheel is elegantly designed for the safety, comfortable and smooth handling by operators in the field.

3. Electrical Actuator:

Advance Butterfly Valves are also supplied with electrical Actuators as per customer's specifications and requirements.

4. Pneumatic Actuator:

Advance Butterfly Valves are also supplied with Pneumatic Actuators as per customer's specification and requirements.

Special accessories for electrical/pneumatic operation such as limit switches, manual overrides, positioners, solenoid valves out AFR are provided as specified.

5. Special Operators:

Valves are available with extended stem for buried operation and valves with chain drives for overhead operation are available. UL 1091 approved valves for fire water systems are also supplied internationally.



Face-to-Face Dimensions

Face-to-face dimensions conform to BS:5155 PN 10 / PN16 (PN 1.0/1.6), ISO 5752, MSS.SP 67 Type I CL 125 (Narrow) and API-609

End Connections

Wafer type flangeless valves are designed to fit without gaskets between flanges as per BS 4504 PN 10 & 16, BS 1560 CL 125 & 150, ASME B 16.5 CL 150, ASME B 16.1 CL 125, BS 10 Table D, E & F and Indian Standard IS 6392 Table 10 to 20. Lug type valves are supplied to suit customers' specifications.

Technological Advantages

Rubber technology is fully developed in-house with facilities to mould, process all elastomers including mixing, vulcanizing and metal to elastomer bonding. The integral liner concept is fail safe design.

Testing Facilities

Extensive in house testing facilities are available to fully ensure quality at all stages. These include:

- Elastomer Testings for Tension, Compression set, Hardness, Specific Gravity & Abrasion Resistance.

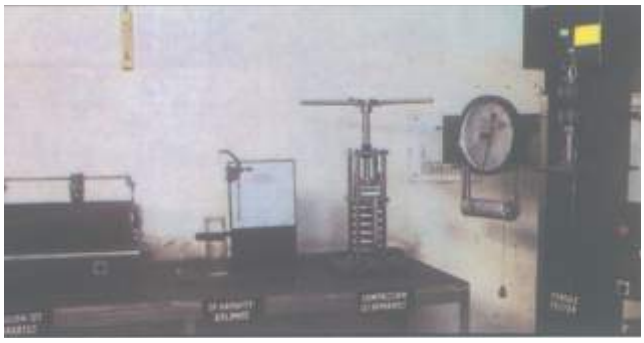

- Dye Penetrant Test, Radiography Interpretation, Routine Tests of Actuators (both electric & pneumatic), Hydrostatic Pressure testing for shell & seat, Pneumatic testing for seat, Valve operating torque test.

Apart form above, other NDT processes including inhouse PMI, Radiography, MPI & Ultrasonic Test and tests for chemical & physical properties including special tests e.g. Low Temperature Impact Test, Inter-granular Corrosion Test etc. are also offered to meet customer requirements through independed Approved Inspection and Test Laboratories.

Valve Testing (Hydrostatic)

Each valve is hydrostatically tested for seat & shell tests as per applicable Standard(s).



Additional tests as required can be carried out as per customer's specification and requirement.

Shell (Body)		Seat
PN-16	24 bar (g)	17.6 bar (g)
PN-20	30 bar (g)	22 bar (g)

Through R & D efforts, improvement and optimisation of design is an on-going process. The design / specifications provided in this catalogue are subject to change accordingly.

Quality Assurance

All the valves are designed for compliance to applicable National/International Standards. Stringent Quality Control and Inspection at all stages of manufacture ensure that products are fully suitable for the specified use to give reliable performance throughout the service.

The Quality Management System of the company has been accredited by Bureau Veritas in accordance with PED Module H CE Marked ISO 9001:2015 & Advance Valves Butterfly Valves are also API 609 Monogram accredited. The UL certificate covers the application of valves in the Fire-Water system. This testing was conducted by Underwriters Laboratories Inc.



Advance Butterfly Valves has been designed and developed using latest techniques of finite Element Analysis & Computational fluid Dynamics.

Construction Features

Body is of one piece design. Top flange is designed to mount required Valve Operator.

Body Liner is integrally moulded and bonded to the body. It provides the seating to valve disc, primary seal to the stem and 'gasket' joint with mating pipe flanges. The integrally moulded liner resists any stretching or distortion. This is a common problem of loosely fitted liner, which results in a need for frequent replacement.

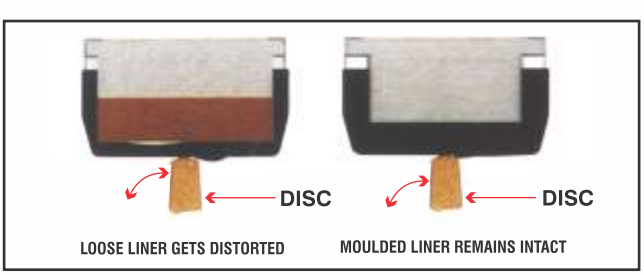

Valve Disc material covers a wide range of applications. It is optimally designed to have an ideal combination of strength and flow efficiency. Ductile iron discs are Nylon coated by design. Epoxy and other coatings are available on request.

Stem: For an optimal combination of flow efficiency and structural stability, valves up to DN 200 (NPS 8) have a two-piece stem. For sizes DN 250 (NPS 10) to DN 600 (NPS 24), the stem is in single-piece construction, which ensures better distribution of the weight of the disc. The stem drives the disc through taper pin(s) to eliminate any backlash between the stem and disc. The material of construction for the stem has been standardized as High Tensile Stainless Steel (AISI 410).

Stem Seal Arrangement

Primary Sealing is provided by preloaded contact flat seat surface and rounded polished disc hub area.

Secondary Sealing is provided by the interference fit between stem and stem hole in seat at all positions.

Even a tertiary sealing has been provided by fitting moulded O-ring between stem and bush supported by atmospheric sealing with O-rings. Thus **Advance** Butterfly Valves provide perfect sealing needing no other gland packing.

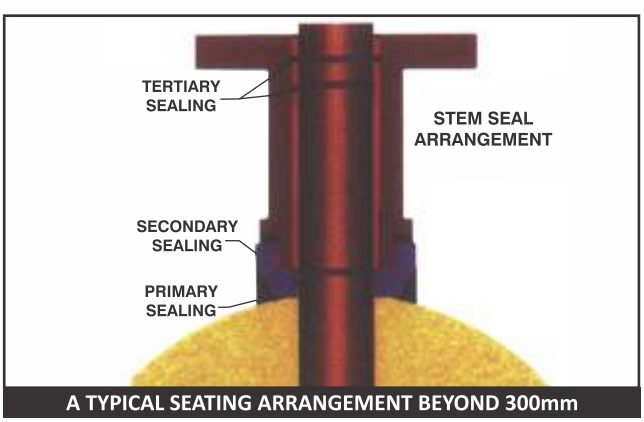

A TYPICAL SEATING ARRANGEMENT BEYOND 300mm

Applications

Advance Butterfly Valves are available in wide range of materials of construction as is evident from the **"Figure Numbering System"** to cover all categories of Industry requirements. Suitable Liner materials (e.g. BUNA-N(Nitrile)/EPDM/VITON-A) are available to meet wide varieties of duties within general industry, HVAC&R, building services and public utilities handling fluids such as water, air, gas, mineral oils, dilute acids and alkaline solutions. **Advance** Butterfly Valves offer an ideal as well as economic solution for sea water application through use of Ductile Ni-Resist (Austenitic Ductile Iron) grade D2 of ASTM A439.

How to Enquire and Order?

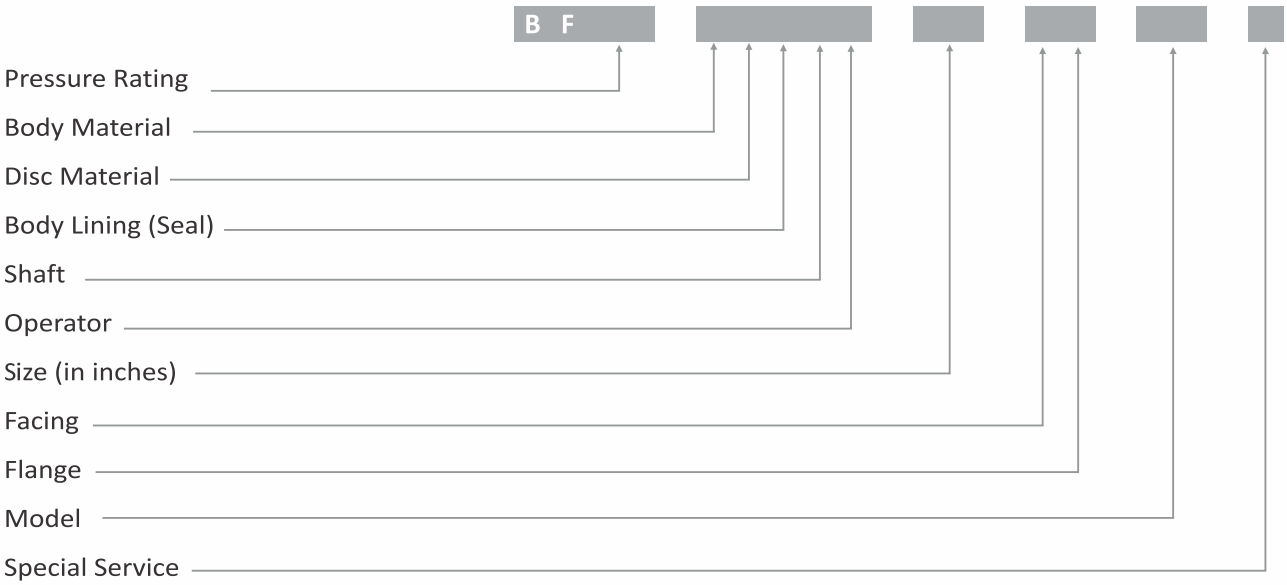

PRESSURE RATING	
Material	Code
PN 10	10
PN 16	16
#150/PN20	15

MODEL	
Material	Code
Wafer	11
Lugged	21
Flanged	31

BODY LINING (SEAL)	
Material	Code
EPDM	M
Viton	Y
Buna N	G

BODY / DISC MATERIAL			
Material	Code	Material	Code
Cast Iron	H	Duplex Gr 6A ASTM 890 - J93380	Z
SGI (SGI Discs are nylon coated)	J	LCB ASTM A352 - J03003	L
WCB ASTM A216	S	LCC ASTM A352 - J02505	M
CA-15 ASTM A217 - J91150	E	Monel 500 - M25-S	P
CF8M ASTM A351 - J92900	C	Monel 400 - N35-2	Q
CF8 ASTM A351 - J92600	A	C12 ASTM A217	1
CF8C ASTM A351 - J92710	8	C5 ASTM A217	2
CF3 ASTM A351	3	Alloy 20 CN7M / 904L	7
CF3M ASTM A351 - J92800	F	Hastealloy B ASTM A494 N7M	I
AB2 C 95800	B	Titanium C2	T
AB2 C 95500	R	Hastealloy C ASTM A494 CW12MW	V
Duplex Gr 4A ASTM 890 - J92205	4	LC3	X
Duplex Gr 5A ASTM 890 - J93404	5	WC6 ASTM A217	6
D2 ASTM A439	K	WC9 ASTM A217	9

SHAFT	
Material	Code
SS-431	K
17-4PH	H
SS-410	E
Duplex 4A	4
Duplex 5A	5
Duplex 6A	Z
Monel 400	Q
Monel 500	P

OPERATOR	
Material	Code
Bareshaft	B
Hand Lever	L
Gear Box	G
Electric Actuator	E
Hydraulic Actuator	H
Pneumatic Actuator	P
Electro Hydraulic Actuator	S
Chain Pully	C

FACING	
Material	Code
Moulded Raised Face	C

FLANGE STD	
Material	Code
ANSI B16.5	A
ANSI B16.1	K

SPECIAL SERVICE	
Material	Code
CE	P
Extended Bonnet	B
Nace	N
EPDM Coated Disc	C
UL	U
Nylon Coated Disc	Y
Epoxy Coating Disc	X

At enquiry stage, please specify all details as per above Figure Numbering System. For valve selection & guidance, please indicate the service temperature, pressure and fluid conditions. For options not listed above, please contact us.

*For example, BF10.HJMEG.12.CA.11 will represent DN 300 (NPS 12) NB **Advance** Water type Butterfly Valve in PN 10 rating with Grey C.I. Body, Ductile Iron Disc, EPDM Body Liner and SS-410 Stem with Gear Operator with ANSI B16.5 flange compatibility.*

Installation Dimensions

Wafer Design (M-11) with Gear Box

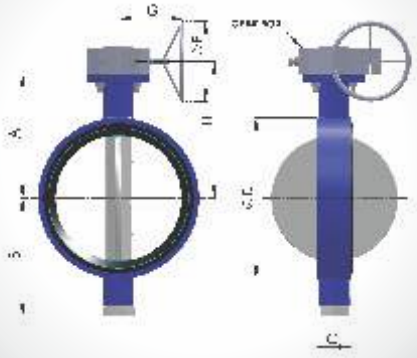

Wafer Design (M-11) with Chain Pully

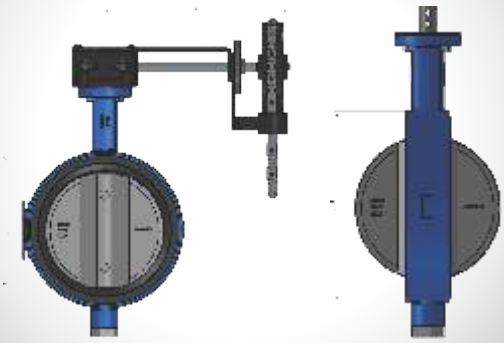

Lugged Design (M-21)

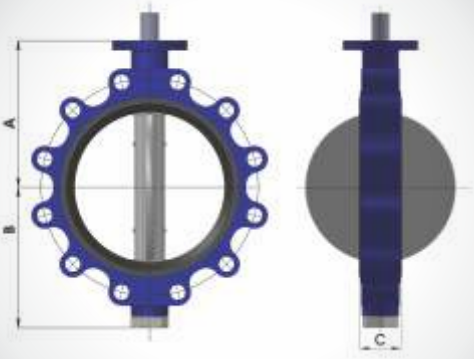

Double Flanged Design (M-31)

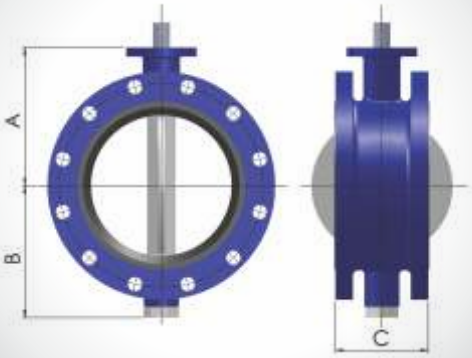

VALVE SIZE (NB) (DN)	(NPS)	A (SHORT NECK)	A (LONG NECK)	B	C (FOR MODEL M-11 & M21)	C (FOR MODEL M31)	D (FOR MODEL M-11)	*DIA. F	*G	*H	K	APPROX WEIGHT IN kg (FOR M-11) (SHORT NECK)	APPROX WEIGHT IN kg (FOR M-11) (LONG NECK)	APPROX. WEIGHT IN Kg(FOR M-21)	APPROX. WEIGHT IN Kg(FOR M-31)
50	2	113	143	68	43	-	96	250	212	143	260	3.5	4.2	5	-
65	2.5	121	151	74	46	-	110	250	212	151	260	4	4.8	7	-
80	3″	128	158	81	46	114	128	250	212	158	260	4.5	5.4	9	12
100	4	146	181	96	52	127	159	250	212	176	260	6.2	7.4	12	16
125	5	158	193	114	56	-	188	250	212	158	260	7.7	9.2	14	-
150	6	174	209	132	56	140	212	250	212	204	260	9	10.8	17	23
200	8	198	238	181	60	152	269	350	227	228	-	14	16.8	24	37
250	10	244	285	234	68	165	321	350	227	274	-	30	36	37	54
300	12	275	315	259	78	178	371	425	250	309	-	44	52.8	58	80
350	14	-	371	284	78	190	436	600	318	407	-	-	50	80	105
400	16	-	390	317	102	216	487	450	315	437	-	-	72	127	146
450	18	-	425	359	114	368	539	600	355	472	-	-	95	132	173
500	20	-	451	384	127	229	592	600	353	517	-	-	120	217	206
550	22	-	485	412	154	267	645	600	353	485	-	-	205	360	318
600	24	-	510	462	154	267	694	600	353	576	-	-	210	370	323
650	26	-	585	527	165	165	762	500	425	656	-	-	260	392	300
700	28	-	585	516	165	165	772	600	445	656	-	-	310	610	375
1000	40	-	810	726	251	251	1150	600	650	912	-	-	885	1210	1060
1050	42	-	810	726	251	251	1086	650	515	880	-	-	1225	1415	1060
1100	44	-	865	811	276	276	1190	600	708	967	-	-	1350	1550	1150
1200	48	-	915	811	276	276	1302	600	570	1006	-	-	1500	1710	1354

As per IS 13095, As per API 609 (CAT-A), Note:- Larger sizes available on request.

* Note:- These dimensions are as per the standard gear operator and will change if alternate operators are used.

mindadvertising.co

MKT:C:03/Issue No. 02/Rev. 00/01 Jan 2018

Manufactured & Marketed by

ADVANCE VALVES

• ADVANCE VALVES PVT. LTD. • ADVANCE VALVES GLOBAL • ADVANCE VALVES SOLUTIONS

Corporate Office : 142-A&B, NSEZ, Phase-2, Noida - 201 305, INDIA Phone : +91 (0) 120 4796900 Fax No.: +91 (0) 120 4796948

Works : Plot No. D-8, Site B, Surajpur Industrial Area. Gr. Noida, U.P.-201306, India, Phone: +91 120 2561145

Plot No. 1, Gagret Industrial Area, Bharwain Road, Gagret, Distt. Una, Himachal Pradesh, India Phone: +91 1976 242104, 302000 Fax: +91 1976 241418

Regional Offices : *Bangalore* : Unit No. 2013, 2nd Floor, Prestige Meridian II, 29-30, MG Road, Bangalore - 560001, India Phone: +91 80 40924006

Mumbai: Office No. 905, Sai Radha Complex, Building No.1, Sai Indu Tower, L.B.S. Marg, Bhandup (W) Mumbai – 400078, Phone: +91 022 67257765

info@advancevalves.com www.advancevalves.com