ADVANCE VALVES

Changing the way you think about valves

advancevalves.com

HIGH PERFORMANCE
Dual Plate Check Valves

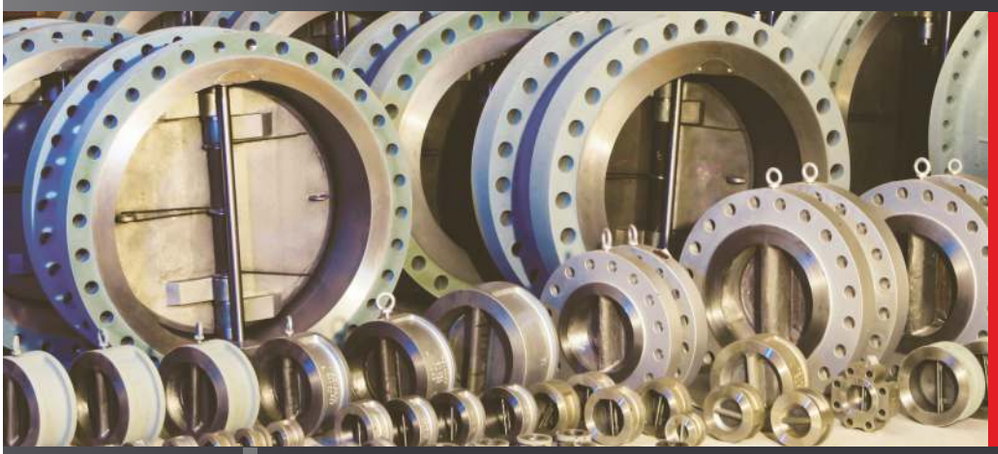

SERIES DPCV



RETAINERLESS | CRYOGENIC | FIRE SAFE | DOUBLE FLANGED

ISO 9001 BUREAU VERITAS Certification

008 0062

More than 4 Decades

'Advance' Dual Plate Check Valves

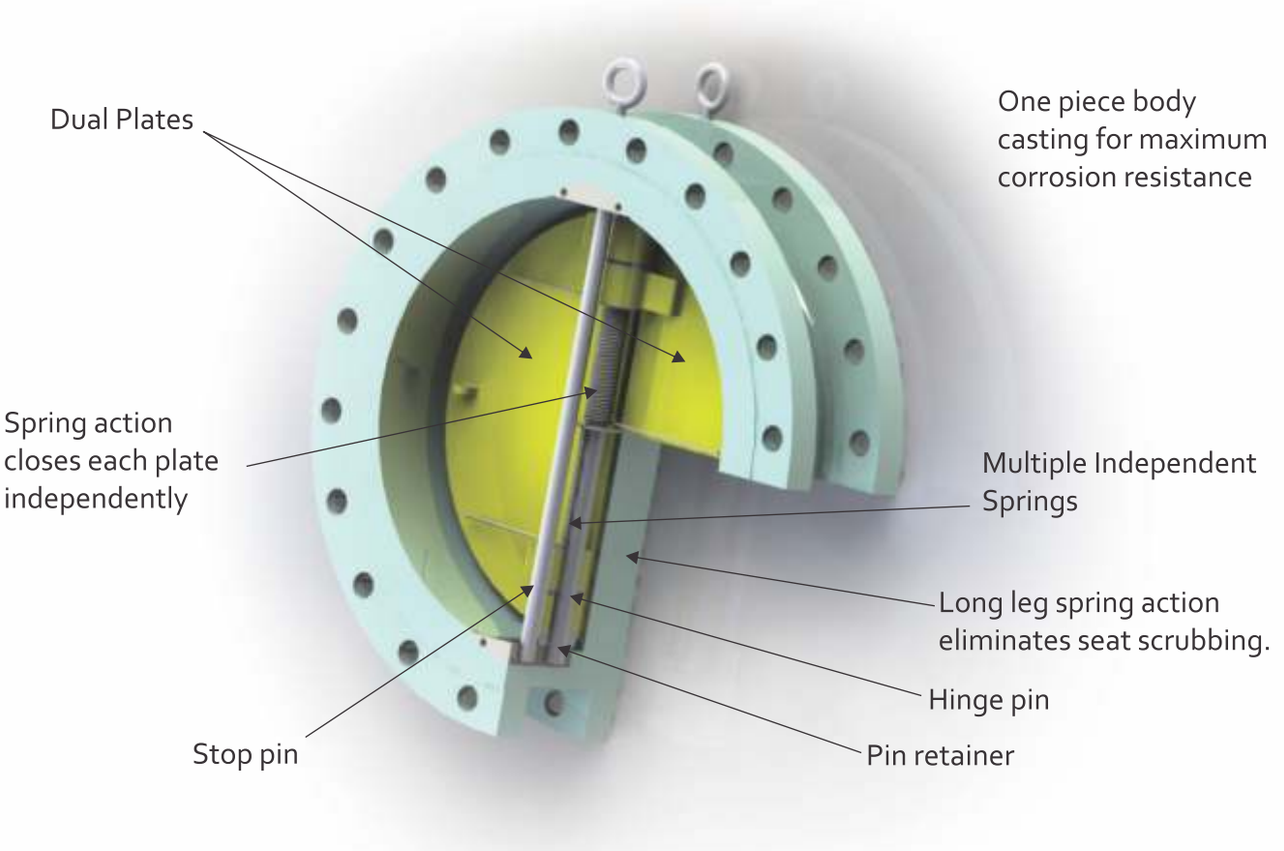

(Available in sizes DN 50 (NPS 2) NB to DN 2000 (NPS 80) NB In Pressure Rating ASME 125 to 2500 for all services.)

DESIGN FEATURES

The dual Plate Check Valve is an all purpose non-return valve that is much stronger, lighter in weight and smaller in size compared to a conventional swing check valve or life check valve.

The Dual Plate Check Valve design is the result of attempts to solve the problems associated with swing check valve and lift check valve. Dual Plate Check Valve employs two spring-loaded plates hinged on a central hinge pin. When the flow decreases, the plates close by torsion spring action without requiring reverse flow. This design offers the twin advantages of No Water Hammer and Non Slam simultaneously. All features put together make the Dual Plate Check Valve one of the most efficient designs. It is also referred to as the SILENT CHECK VALVE.

The valve design conforms to APS 594 as well as API 6D except face to face dimensions of ANSI 125 cast iron valves of sizes 65mm (2 ½") to 300mm (12"). Valve inspection and testing conforms to API 598.

Dual Plate Check Valve are available in wafer design, flanged wafer design and extended design with flanged ends having face to face dimensions as that of a swing check valve.

Structurally More Sound Design

The valve has cylindrical body which makes the valve look like any other pipe fitting. A cylindrical body has much more uniform distribution of stress compared to a conventional swing check valve. A cylindrical body of the pressure containing part of the Dual Plate Check Valve can be design to withstand extreme much to the weight (thickness0 of valve. Thus for severe/rugged loading conditions, these valves have a distinct edge over the conventional valves both in terms of safety and economics besides general versatility.

"Advance" Dual Plate Check Valves have been designed and developed using "Computational Fluid Dynamics" Finite Element Analysis.

Hydraulically Engineered Design

Hydraulically, the design is more versatile. In horizontal installation, the weight of the door (Plate) does not play any significant role in valve closure or opening, unlike in a conventional swing check valve where closure / opening is assisted / hampered by gravity. The opening and closing rates can be designed to suit a particular application which may be hydraulically more sensitive.

Double Spring Action

The Dual Plate Check Valve above DN 150 (NPS 6) NB are provided with two springs to avoid disparate forces acting on each plate as in the case of single spring design. This is to ensure even closing. This is achieved single legged or suitably designed double legged springs.

Valve Operation

The plates are smaller in area and lighter in weight being two in number compared to one in a conventional swing check valve. The unique feature of plate opening (i.e. it first lifts up at heel and then swings) ensures no rubbing actions against seat. This results in lower rate of wear and tear of seals. This feature is not feasible in other designs which results in a higher rate of seal wear. This is achieved by the special spring action and hinge design.

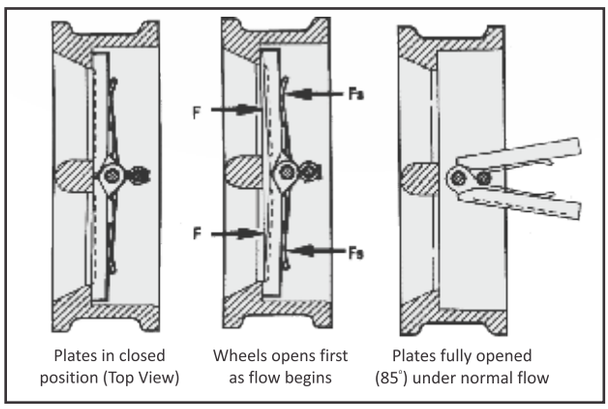

Plates in closed position (Top View) | Wheels opens first as flow begins | Plates fully opened (85°) under normal flow

SEAL DESIGN

Resilient Seal	Metal to Metal Seal
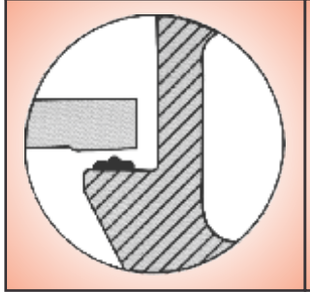	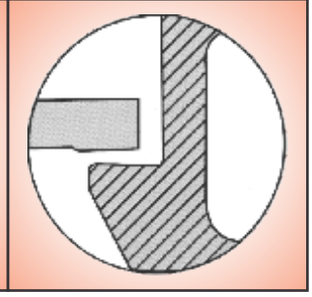

The valve are available with resilient seal as well as metal-to-metal seating as depicted above.

Flexible Installation (vertical / horizontal)

The installed valve is more rigid than an equivalent length of heavy section pipe eliminating the need for any special support etc. The spring action (in place of gravity) enables the valve to be installed in any position – vertical or horizontal.

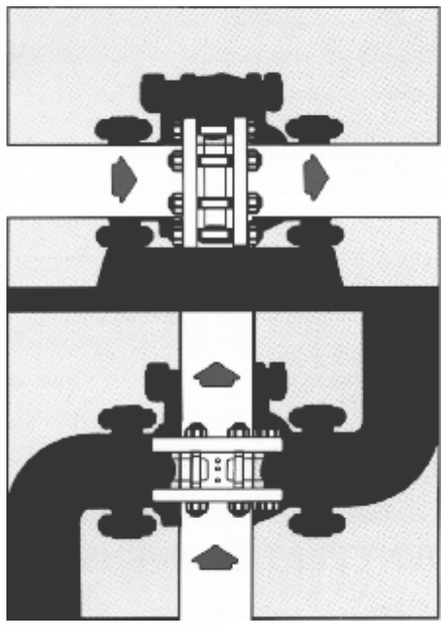

No Water Hammer

To eliminate water hammer, a Check Valve should close without any reverse flow.

Water hammer is almost non-existent since closing of the valve does not depend on back pressure and back flow. Each plate being half the size of a swing check disc, it can pass through the process flow more easily and quickly. Due to spring assisted closing, valve closure starts as soon a flow velocity reduces below the designed minimum velocity and thereafter the closing rate follows the flow velocity pattern. Therefore, the valve closes as the flow velocity reduces to zero, before the flow reverses, thus eliminating the water hammer.

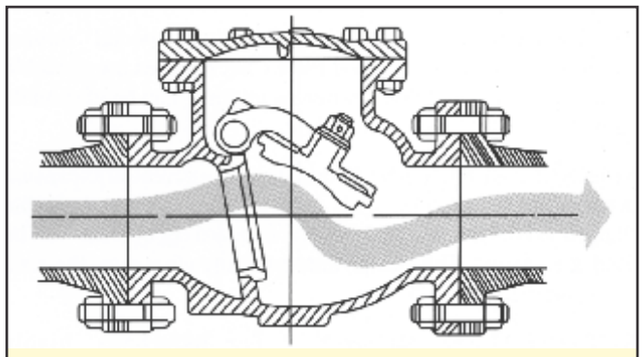

The Heavy Disc in Swing Valves Develops heavy momentum as it swings to the closed positions.

No Slamming

The Dual Plate Check Valvedesign can be classified as “Non-Slam Design”. The swing disc in swing check valve is hinged at the top. The force of gravity includes high inertia as it swings to the closed position. The momentum can cause severe damage when the disc slams to the valve seat. To reduce this, one has to go for a balancing weight/dash pot etc. This makes the valve more expensive and bulky. Furthermore, any counter weight/dash pot arrangement works counter productive in prevention of water hammer.

The two plates in Dual Plate Check Valve are hinged in the centre vertically for horizontal installations eliminating the effect of the gravity altogether. Also, the momentum developed as they moved to the closed position is a fraction of what is developed in a swing check valve as the weight of each plate is 1/4th the weight of swing disc and the tip velocity is less than half. Further, due to spring assisted closing the valve closes at zero flow before back (negative) flow begins. As it starts closing, the flow as such cushions the plates and seat hence the chances of slamming are negligible.

Independent Plate Suspension

For valve sizes DN 450 (NPS 18) NB and above each plate is supported independent of each other. In any position (Horizontal or Vertical) each plate's weight is directly transferred to the body.

Special Service Valves

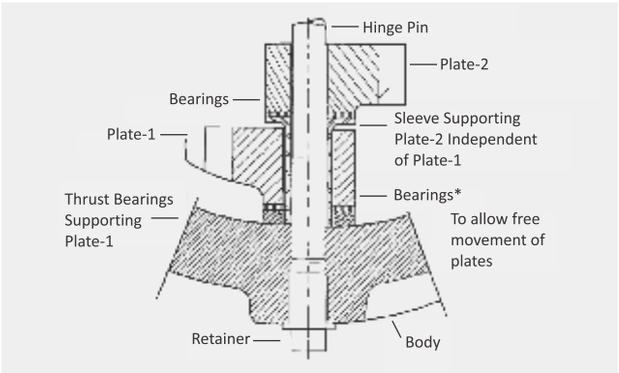

Rubber Lined Valves: To meet special service requirements “Advance”Dual Plate Check Valves are available in fully rubber lined bodies, whereas internals can be of suitable alloys to meet the fluid environment.

Fire Safe Services: To take care of differential expansion between body and long studs in fire hazardous areas, double flanged valves are available where standard set of studs can be used at each end. This design automatically eliminates the need for separate Lug type Design.

Retainerless Design: For hazardous, highly corrosive / toxic chemicals and hazardous gases, “Retainerless” designs are available.

Special Application Valves: Company is equipped to offer special application valves including jacketed, IBR application, Low velocity fluid applications, or other specialized applications.

Inspection & Approval: The Company is fully equipped with all necessary inspection and testing facilities including vacuum test.

“Advances” Valves are inherently “Quality Assured.” The Quality Management System of the Company has been accredited by Bureau Veritas in accordance with IS/ISO 9001:2015 and according to European Pressure Equipment Directive 97/23/CE, Module H to use CE 0062 monogram accredited by Bureau Veritas as a recognition to its continuous commitment towards total quality.





API-6D: The valves are designed and manufactured meeting all there quirement of API-6D standard and the company has acquired API-6D licence.

“Advance” Dual Plate Check Valves are widely accepted by all leading Indian and Overseas Engineering Consultants and users in all types of services viz. Water, Oil & Gas, Fertilizers, Chemicals Petrochemicals, Refinery, Metallurgy, Steel and Power sectors including nuclear and other areas.

The company has the distinction of being in the select band of companies supplying valves meeting nuclear application requirements as per ASME Section III.

“Advance” Valves are being exported to various countries e.g. Indonesia, Thailand, U.K., U.S.A., Gulf countries, under Third Party Inspection by International Inspection Agencies.

Dual Plate Check Valve can be safely classified as Zero Velocity Valve. The design has everything which the other conventional valves miss. It is a valve most efficient in operation irrespective of fluid and service conditions and the easiest to handle and install in any piping system with no constraints. It truly meet the protective device criteria of a check valve (NRV).

Head Loss v/s Flow Rate

Advance Dual Plate Check Valve

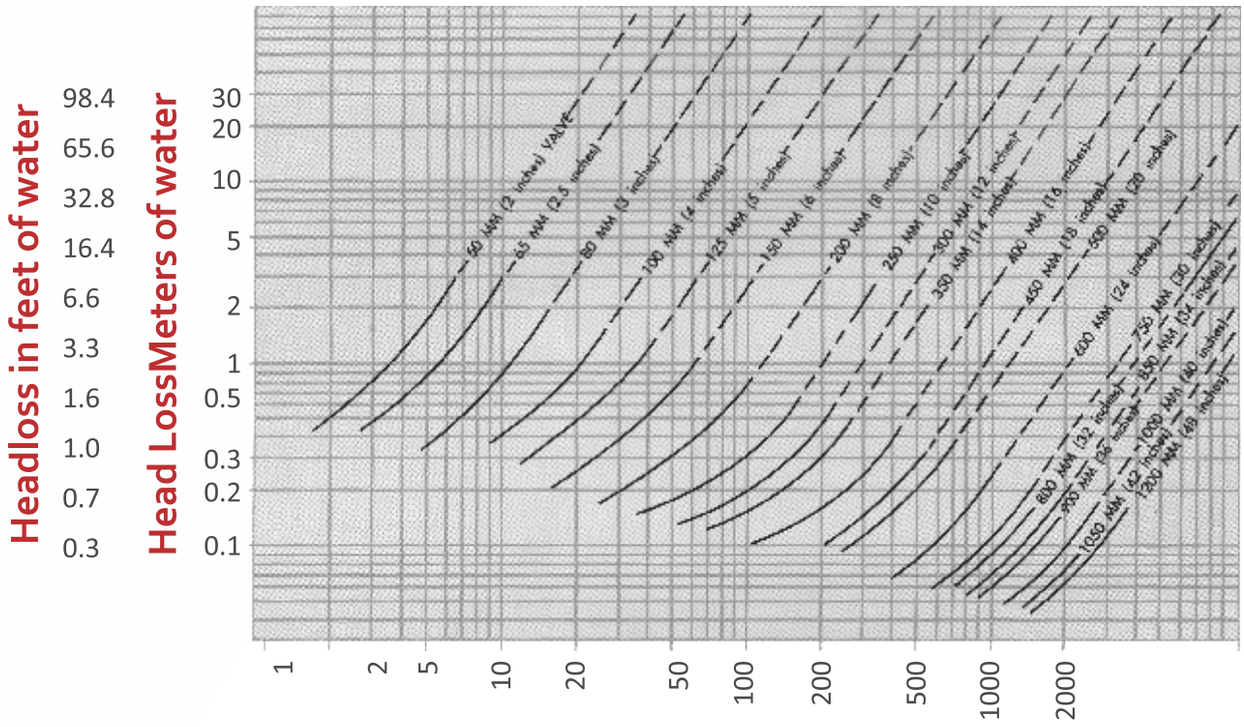

The above curves show pressure drops available with standard torque springs in horizontal flow conditions as calculated. System with abnormal flow conditions or non-return function can be supplied with different torque springs to meet other hydraulic parameters.

Lower Pressure Drop

The design of Dual Plate Check Valves divides the total force in half, since each plate covers only one-half the area of a swing check disc. One-half the force on each plate requires one-half thickness, hence one-fourth the mass of a swing check disc.

Ff (hinge friction) plus Fs (spring force) times 0.75B (force point) minus F (force) times B (width) equals zero for equilibrium.

Ff (Friction of Hing)+Fs(0.75B)-FB=0

Therefore,

$$F = 0.75FS + \frac{Ff\ (Friction\ of\ Hinge)}{B}$$

The weight of the plates does not increase the force required.

Dual Plate Check Valve has much lower pressure drop due to lower force.

The best analogy between a swing check valve and Dual Plate Check Valve would be a door hinged from the top and a door hinged on its side with an appropriate door closure. The force required for operating the two doors can be just visualized and compared.

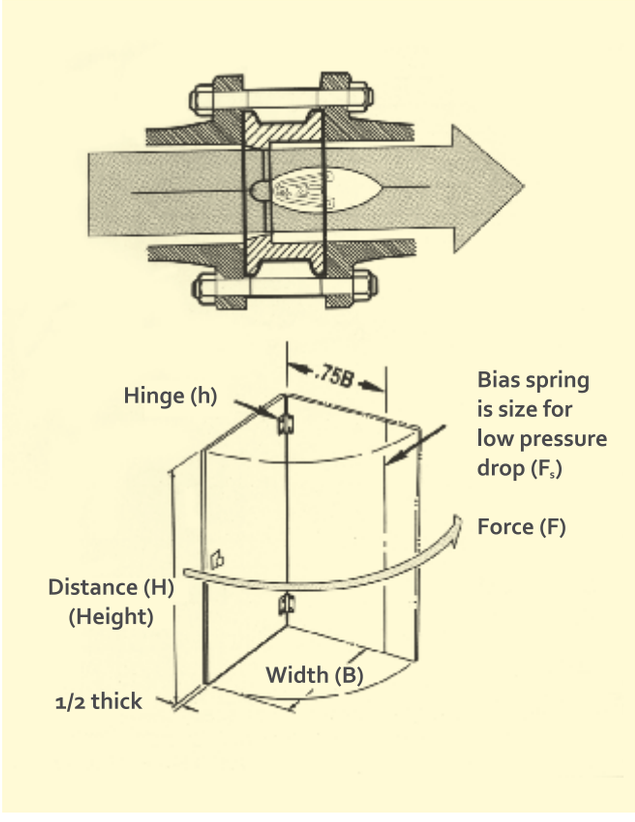

Dual Plate Check Valves v/s Swing Check Valve

Advantages Summarised at a Glance

DUAL PLATE CHECK VALVE	SWING CHECK VALVE
☛ Light Weight sthus easier handling and self-supporting.	☛ Bulky & Voluminous thus cumbersome handling & heavier supporting system.
☛ More compact & structurally sound design.	☛ Large & difficult to analyse from stress concentration points in critical applications due to intricate body shape.
☛ Same valve can be installed horizontally or vertically.	☛ Suitable primarily for horizontal applications. Not Possible.
☛ Only Check Valve which can be installed for flow upside down due to spring assisted closure.	☛ Significant Pressure Loss and Energy Loss, which is still higher for higher pressure ratings.
☛ Low Pressure Drop and reduced Energy Loss irrespective of Pressure Ratings.	☛ Swing restricted flow-way.
☛ Streamlined flow–way.	☛ Always requires reverse flow for closure and back pressure for effective sealing.
☛ Efficient and Positive sealing under most flow and pressure conditions. Valve close before flow reversal, at zero velocity.	☛ External attachment required to counteract slamming.
☛ Inherently Non-Slamming =. No external devices / attachments required.	☛ Water hammer tendency persists.
☛ Water Hammer almost non-existent.	☛ Seat & Hinge Pin require regular maintenance due to impact loads and wear by rubbing.
☛ Long life and trouble-free operations.	

TYPICAL APPLICATIONS

The Dual Plate Check Valve is a most versatile design available in specific materials constructions to suit particular Pressure. Temperature and Fluid / Flow / Characteristics. Some of the Typical Applications are as follows:

Water : Water Supply Systems, Fire Water Systems, Cooling Water, Chilled / Hot Water Systems, Boiler Feed Water, Sea Water, Potable Water, Raw Water etc.

Hydrocarbons : All Applications.

Oil & Gas : Onshore/Offshore, Petroleum, Lubricating Oil, Edible Oils, LPG, LNG, Sour Gas Low Temperature, Cryogenic Applications etc.

Air & Gases : All gases like Chlorine, Hydrogen, Nitrogen, Carbon Dioxide (CO_2) Oxygen etc.

Metallurgical & Chemical Processes : Sugar, Pharmaceutical, Paper, Cement, Steel, Aluminum, Copper, Zinc, Power and other industries.

There is a solution to almost all Non-Return (Check Valve) problems, varying from Fire Safe Services to Cryogenic conditions with a suitably designed Dual Plate Check Valve.

Through R&D efforts, improvements and optimisation of design is an on-going process. The design / specifications provided n this catalogue are subject to change accordingly.

Advance Dual Plate Check Valve

Lugged Retainerless Design

PART LIST

Item No.	Part Name
1	Body
2	Plate
3	Hinge Pin
4	Stop Pin
5	Spring*
6	Body Bearing
7	Plate Bearing
8	Spring Bearing
9	Sleeve Bearing #
10	Sleeve#
11	Pin Holder
12	Holder Lock
13	Lock Screw
14	Eye Bolt **

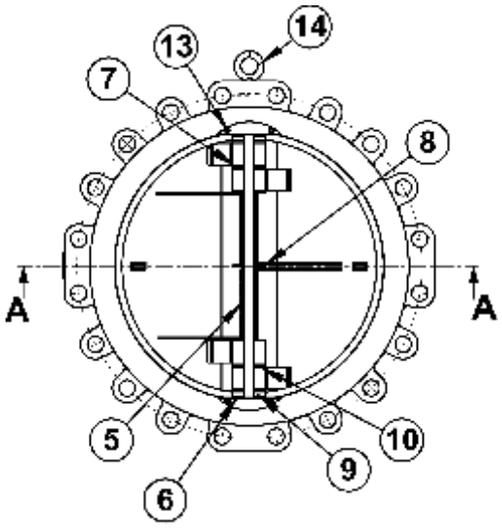

ELEVATION

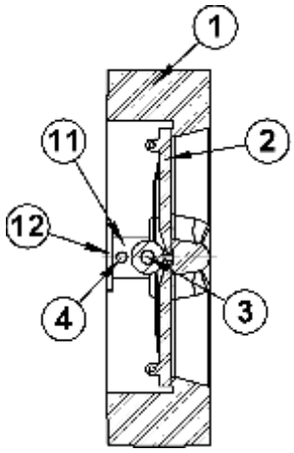

SECTION A-A

Notes:
* Single spring up to DN 125 (NPS 5)
\# Sleeve provided only for DN 450 (NPS 18) and above (independent suspension).
** Eyebolt provided only for DN 200 (NPS 8) and above.

Advance Dual Plate Check Valve

Double Flanged Retainerless Design

PART LIST

Item No.	Part Name
1	Body
2	Plate
3	Hinge Pin
4	Stop Pin
5	Spring*
6	Body Bearing
7	Plate Bearing
8	Spring Bearing
9	Sleeve Bearing #
10	Sleeve#
11	Pin Holder
12	Holder Lock
13	Lock Screw
14	Eye Bolt **

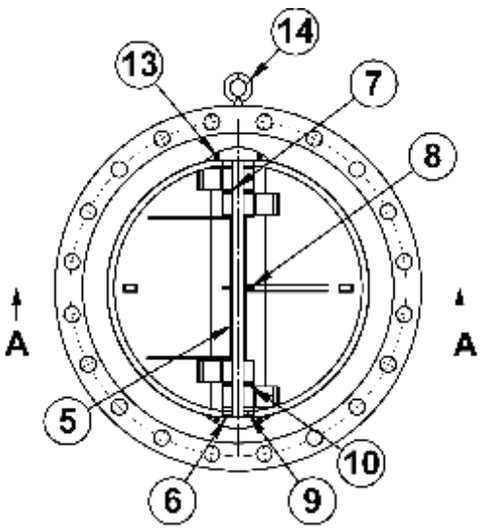

ELEVATION

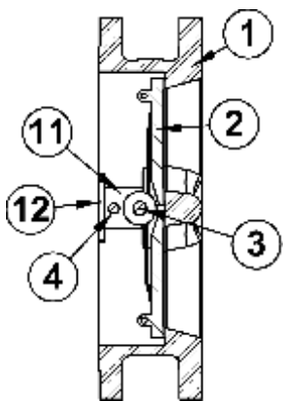

SECTION A-A

Notes:
* Single spring up to DN 125 (NPS 5)
\# Sleeve provided only for DN 450 (NPS 18) and above (independent suspension).
** Eyebolt provided only for DN 200 (NPS 8) and above.

Advance Dual Plate Check Valve

Wafer Retainerless Design

PART LIST

Item No.	Part Name
1	Body
2	Plate
3	Hinge Pin
4	Stop Pin
5	Spring*
6	Body Bearing
7	Plate Bearing
8	Spring Bearing
9	Sleeve Bearing #
10	Sleeve#
11	Pin Holder
12	Holder Lock
13	Lock Screw
14	Eye Bolt **

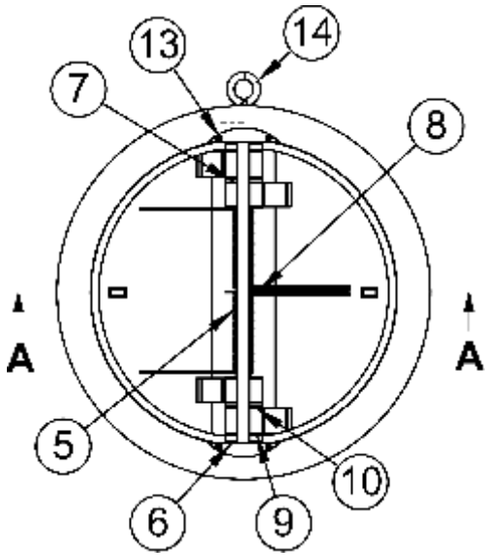

ELEVATION

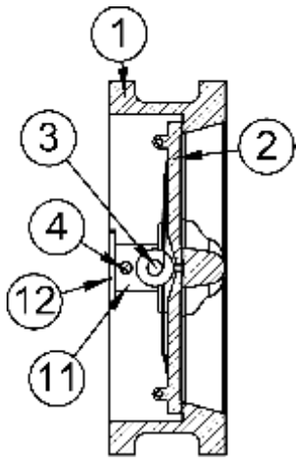

SECTION A-A

Notes:
* Single spring up to DN 125 (NPS 5)
\# Sleeve provided only for DN 450 (NPS 18) and above (independent suspension).
** Eyebolt provided only for DN 200 (NPS 8) and above.

Advance Dual Plate Check Valve

Butt Welded Retainerless Design

PART LIST

Item No.	Part Name
1	Body
2	Plate
3	Hinge Pin
4	Stop Pin
5	Spring*
6	Body Bearing
7	Plate Bearing
8	Spring Bearing
9	Sleeve Bearing #
10	Sleeve#
11	Pin Holder
12	Holder Lock
13	Lock Screw

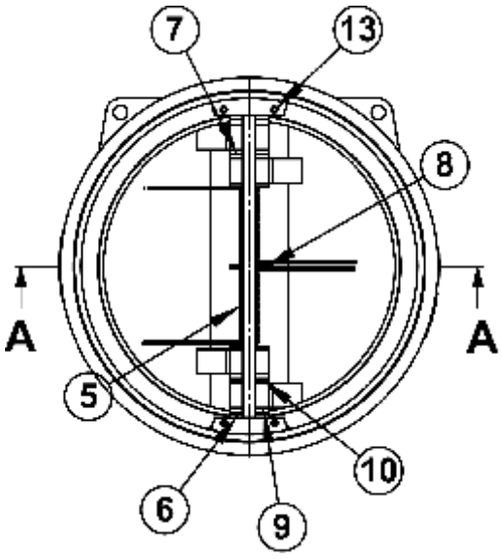

ELEVATION

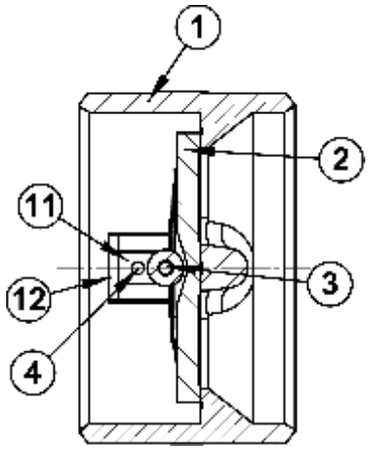

SECTION A-A

Notes:
* Single spring up to DN 125 (NPS 5)
\# Sleeve provided only for DN 450 (NPS 18) and above (independent suspension).

Advance Dual Plate Check Valve

Wafer Retainer Design

PART LIST

Item No.	Part Name
1	Body
2	Plate
3	Hinge Pin
4	Stop Pin
5	Spring*
6	Retainer
7	Body Bearing
8	Plate Bearing
9	Spring Bearing
10	Sleeve Bearing #
11	Sleeve #
12	Eye Bolt **

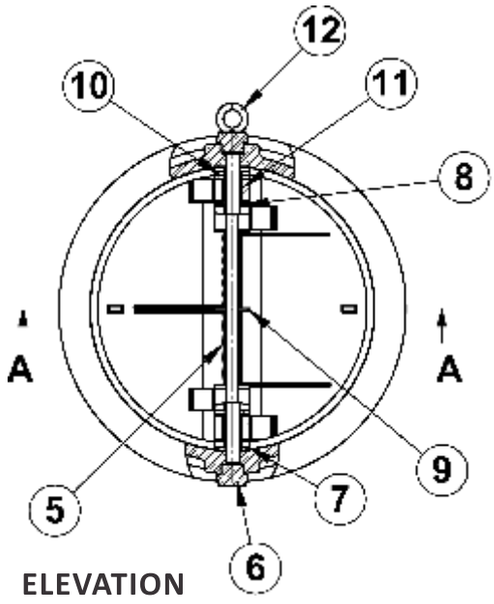

ELEVATION

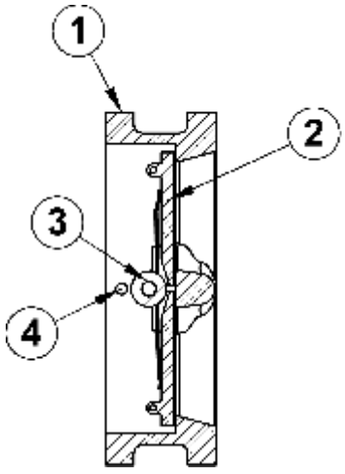

SECTION A-A

Notes:

* Single spring up to DN 125 (NPS 5)

\# Sleeve provided only for DN 450 (NPS 18) and above (independent suspension).

** Eyebolt provided only for DN 200 (NPS 8) and above.

Advance Dual Plate Check Valve

Jacketed Retainerless

PART LIST

Item No.	Part Name
1	Body
2	Plate
3	Hinge Pin
4	Stop Pin
5	Spring*
6	Body Bearing
7	Plate Bearing
8	Spring Bearing
9	Pin Holder
10	Holder Lock
11	Lock Screw
12	Eye Bolt**
13	Jacket (FAB.)

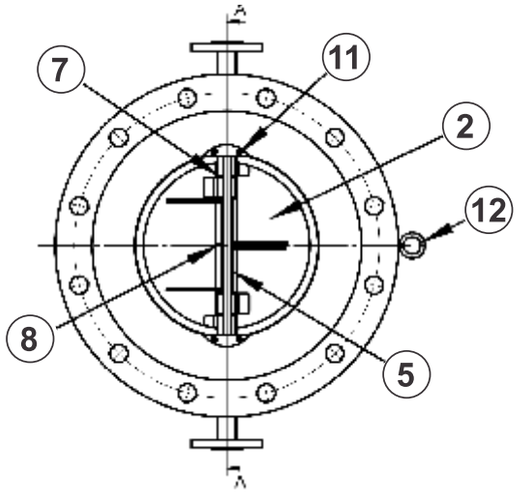

ELEVATION

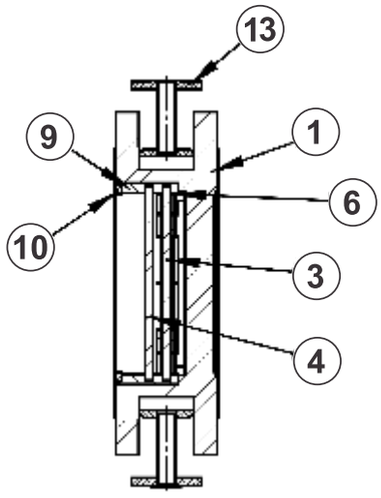

SECTION A-A

Notes:

* Single spring up to DN 125 (NPS 5)

\# Sleeve provided only for DN 450 (NPS 18) and above (independent suspension).

** Eyebolt provided only for DN 200 (NPS 8) and above.

How to Order

Figure Numbering System

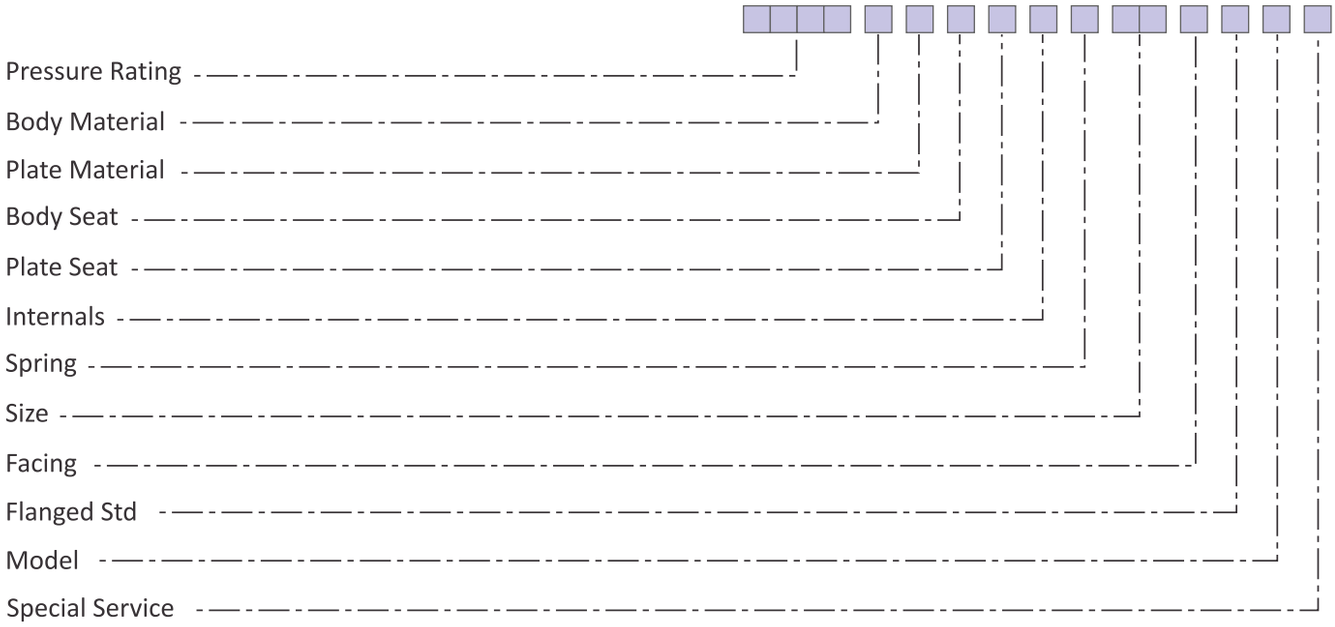

RATING	
Pn10	10
Pn16	16
CL 125	12
CL 150	15
CL 300	30
CL 600	60
CL 900	90
CL 1500	A5
CL 2500	B5

BODY & PLATE MATERIAL	
WCB ASTM A216	S
LCB ASTM A352	L
LCC ASTM A352	M
WC6 ASTN A217	6
CA-15 ASTM A217	E
C5 ASTM A217	2
C12 ASTM A217	1
CA6NM ASTM A352	Y
CF8M ASTM A351	C
CF3M ASTM A351	F
CF8C ASTM A351	8
Duplex Gr 4A ASTM 890/995	4
Duplex Gr 5A ASTM 890/995	5
Duplex Gr 6A ASTM 890/995	Z
Inc 625 ASTM A494 CW_6MC	N
Inc 825 ASTM A494CU5MCuC	U
CK3MCuN ASTM A351 - S31254	O
St-6	D
ASTM B367 GRC2 (Titanium)	T
Hastealloy B ASTM A494 N7M	I
Hastealloy C ASTM A494 CW12MW	V
ASTM A 494 GR M35-1 N24020 (MONEL 400)	Q
ASTM A494 GR M25-S N24025 (MONEL 500)	P
ASTM B148 AB2 C 95800/95500	B
ASTM A148 AB2 C 95500/95400	R
Wc9 ASTM A217	9
ASTM A 352 LC3	X
CF8 ASTM A351	A
CF3 ASTM A351	3
ASTM A351 GR CN7M N08007	7
D2 ASTM A439	K
CF3MN ASTM A351	0
Gun Metal	G
ASTM A126 / IS 210 Cast Iron	H
ASTM A536 / ASTM 385 SGI	J
AB2 ASTM B148 UNS C95400	B
ASTM A126 GR B	X
ASTM A216 WCC	W
ASTM A395 GR 60-40-18	X
ASTM A395 GR 60-45-15	X
ASTM A494 GRADE CW2M	X
ASTM A494 GRADE CY-40-1	X
ASTM A 351 GR CG8M	X

FLANGE STD	
ANSI B16.5/ANSI B16.47 A / MSS-SP-44	A
ANSI B 16.47 B	B
AWWA C 207	C
IS 6392	F
IS 1538	G
BS 4504	H
ANSI B16.1	K
BS 10 E	S
BS 10 D	T
B16.25	Z
HUB END	Y
Others	X
IS 9523/PN15	I

BODY SEAT	
Integral	I
13% Cr. / SS-410	E
SS-304 Gr.18.8	A
SS-304L	3
SS-316 Gr.18.8.2	C
SS-316L	F
Inc. 625	N
Inc. 825	U
Monel 400 - N35-2	Q
Monel 500 - M25-S	P
AB2 C 95800	B
Stellite-6	D
Viton	Y
Buna N	G
EDPM	M
Hastalloy	V
Alloy 20	Z
RPTFE	T

SPECIAL SERVICE	
Cryogenic	C
Drilled Hole	D
Firesafe	F
GOST Certified	G
Hydrogen	H
IBR	I
Low Temp	L
Nuclear	J
Oxygen	O
CE	P
Special Spring	S
Vacuum	V
Nace	N
Drain Plug	U
Jacketed	J
6D	6
Marine	M
Lethal	A

SIZE (DN)	
40	1H
50	02
65	2H
80	03
100	04
125	05
150	06
200	08
250	10
300	12
350	14
400	16
450	18
500	20
550	22
600	24
650	26
700	28
750	30
800	32
850	34
900	36
950	38
1000	40
1050	42
1100	44
1150	46
1200	48
1250	50
1300	52
1350	54
1400	56
1450	58
1500	60
1550	62
1600	64
1650	66
1700	68
1750	70
1800	72
1850	74
1900	76
1950	78
2000	80

INTERNALS	
SS-304L	3
SS-321	8
SS-304	A
SS-316	C
SS-410	E
SS-316L	F
Duplex 4A	4
Duplex 5A	5
17-4PH /17-7PH	H
SS-431	K
Inc. 625	N
Inc. 825	U
Monel 500	P
Monel 400	Q
254SMO	O
Titanium	T
Hastealloy C	V
Ferrallium	0
Duplex 6A	Z
Alloy 20 CN7M / 904L	7
SS 321H	9
ASTM A479/A351 GR. CK3MCuN	S
SS-347	B
MS	S
Phosphors Bronze	1
SS 316H	6
SS 304H	7

SPRING	
SS-304	A
SS-316	C
Inconel X 750	I
Inconel X 625	N
Monel 500	P
Inconel X 718	J
Inconel X 600	L
Titanium C2	T
Alloy 20	7
DPCV Hastelloy	V
SS316L	F

FACING	
Flat Face Smooth	A
Flat Face Serrated	B
Raised Face Smooth	C
Raised Face Serrated	D
Ring Joint	E
Hub End	X
Butt Weld	Z
Moulded Raised Face Smooth	F

PLATE SEAT	
Integral	I
13% Cr. / SS-410	E
SS-304 Gr.18.8	A
SS-316 Gr.18.8.2	C
SS-316L	F
Inc. 625	N
Inc. 825	U
Monel 400 - N35-2	Q
Monel 500 - M25-S	P
AB2 C 95800	B
Stellite 6	D
EDPM	M
Chro Hard Force	X
Hast Alloy	V
Alloy 20	Z
RPTFE	T

MODELS	
Wafer	11
Wafer Retainerless	12
Wafer Lined	13
Wafer Cladded	14
Lugged	21
Lugged Retainerless	22
Lugged Lined	23
Lugged Cladded	24
Pre-Insulated	25
Double Flanged	31
Double Flanged Retainerless	32
Double Flanged Lined	33
Double Flanged Cladded	34
Weld Neck (Butt Weld)	41
Weld Neck (Butt Weld R/Less)	42
Solid Lugged	61
Solid Lugged Retainerless	62
Solid Lugged Lined	63
Hub End	71
Hub End Retainerless	72
Hub-end cladded	74
Mono Flanged	81
Mono Flanged Retainerless	82
Mono Flanged Lined	83

Spring Selection

For standard Valve, with resilient seal, spring will be of SS 304 (or SS 316 if required) as standard. For Metal-to-Metal seating SS 316 or Inconnel X-750 will be offered as required by the process conditions.

For operating temperature above 120°C only Inconnel X-750 spring is recommended and used.

For proper spring selection, the service temperature, pressure and fluid conditions should be specified at enquiry stage.

SEAL

Material	Operating Temperature*	
	°C	°F
Buna N/EPDM**	-57 to 120	-70 to 250
Viton A **	-40-204	-40 to 400
Metal-to-Metal	-267 to 537	-450 to 1000

* This range of operating temperature is for general guidance. These may vary with service conditions, body and plate material.

** Silicon Rubber can also offered as per customer requirement.

ANSI Maximum Working Pressure

Advance Dual Plate Check Valve

TABLE 3

Temperature		Maximum Non Shock Service Pressure (ASME B 16.34, 1981)																			
		Series 150				Series 300				Series 600				Series 900				Series 1500			
		Steel		SS 316		Steel		SS 316		Steel		SS 316		Steel		SS 316		Steel		SS 316	
°C	°F	Kg/cm³	psi	Kg/cm³	psi	Kg/cm³	psi	Kg/cm³	psi	Kg/cm³	psi	Kg/cm³	psi	Kg/cm³	psi	Kg/cm³	psi	Kg/cm³	psi	Kg/cm³	psi
-29 to 38	-20 to 100	20.0	285	9.3	275	52.0	740	50.6	720	104.0	1480	101.2	1440	156.3	2220	152.1	2160	260.9	3705	253.5	3600
66	150	19.0	270	17.9	255	49.6	705	47.1	670	99.1	1410	94.2	1340	149.2	2120	100.5	2010	249.2	3540	235.5	3345
93	200	18.3	260	16.9	240	47.5	675	43.6	620	94.9	1350	87.2	1240	142.6	2025	130.9	1860	237.6	3375	217.9	3095
121	250	17.2	245	15.8	225	46.7	665	41.5	590	93.5	1330	83.0	1180	140.4	1995	124.6	1770	234.1	3325	207.3	2945
149	300	16.2	230	15.1	215	46.0	655	39.4	560	92.4	1315	78.7	1120	138.7	1970	118.3	1680	230.9	3280	196.8	2795
177	350	15.1	215	14.4	205	45.3	655	37.6	535	90.7	1290	75.6	1075	136.2	1935	113.3	1610	227.1	3225	188.7	2680
204	400	14.1	200	13.7	195	44.6	645	36.2	515	89.3	1270	72.4	1030	133.8	1900	108.4	1540	223.2	3170	180.9	2570
232	450	13.0	185	12.7	180	43.2	635	34.8	495	86.8	1235	69.6	990	129.9	1845	104.5	1485	216.9	3080	174.6	2480
260	500	12.0	170	12.0	170	42.2	615	33.7	480	84.4	1200	67.1	955	126.4	1795	101.0	1435	210.9	2995	168.3	2390
288	550	10.9	155	10.9	155	40.4	600	32.7	465	80.5	1145	65.4	930	120.7	1715	98.2	1395	201.9	2865	163.3	2320
316	600	9.8	140	9.8	140	38.7	575	31.6	450	77.0	1095	63.6	905	115.4	1640	95.4	1355	192.6	2735	158.8	2255
343	650	8.8	125	8.8	125	37.6	550	31.3	440	75.6	1075	62.6	890	113.3	1610	93.6	1330	189.0	2685	156.3	2220
371	700	7.7	110	7.7	110	37.6	535	30.2	430	74.9	1065	60.8	865	112.6	1600	91.1	1295	187.6	2665	152.1	2160
399	750	6.7	95	6.7	95	35.5	505	29.9	425	71.0	1010	59.4	845	106.3	1510	89.4	1270	177.4	2520	148.5	2110
427	800	5.6	80	5.6	80	28.8	410	29.2	415	58.0	825	58.3	830	86.9	1235	87.6	1245	145.0	2060	146.4	2075
454	850	4.4	65	4.6	65	19.0	270	28.5	405	37.6	535	56.9	810	56.6	805	85.5	1212	94.3	1340	142.9	2030
468	875	3.9	55	3.9	55	15.5	220	28.1	400	30.9	440	56.2	800	46.4	660	84.1	1195	77.4	1100	140.8	2000
482	900	3.5	50	3.5	50	12.0	170	27.8	395	24.3	345	55.5	790	36.2	515	83.0	1180	60.5	860	138.7	1970
496	925	2.8	40	2.8	40	9.5	135	27.4	390	19.3	275	54.8	780	28.8	410	82.3	1170	48.2	685	137.3	1950
510	950	2.5	35	2.5	35	7.4	105	27.1	385	14.4	205	54.5	775	21.8	310	81.6	1160	36.2	515	135.9	1930
524	975	1.8	25	1.8	25	5.3	75	26.4	375	10.9	155	52.7	750	16.1	230	79.2	1125	27.1	385	132.0	1875
538	1000	1.4	20	1.4	20	3.5	50	25.7	365	7.4	105	51.0	725	10.9	155	76.7	1090	18.3	260	128.1	1820
Hydrostatic ambient		31.6	450	29.9	425	79.1	1125	77.3	1100	152	2160	150	2170	238	3380	228	3240	396	5625	380	5400

ANSI Installation Dimensions

Advance Dual Plate Check Valve

(DOUBLE FLANGED TYPE MODEL AV-WP-12,22,32)

TABLE 1

SIZE N.B.	ANSI RATING	DIMENSIONS (mm)			Double Flanged Valve Weight Aprox. (Kg.)
		A (Flange OD)	B (Face to Face)		
			Double Flanged	Wafer/ Lugged	
DN 50 (NPS 2)	150	150	114	60	8
	300	165	114	60	9
	600	165	121	60	13
	900	215	165	70	21
	1500	215	165	70	23
	2500	235	225	70	125
DN 80 (NPS 3)	150	190	121	73	12
	300	210	121	73	18
	600	210	143	73	22
	900	240	165	83	30
	1500	265	207	83	45
	2500	305	280	86	175
DN 100 (NPS 4)	150	230	121	73	20
	300	255	121	73	23
	600	275	165	79	45
	900	290	197	102	55
	1500	310	225	102	75
	2500	355	330	105	235
DN 150 (NPS 6)	150	280	130	99	30
	300	320	130	99	45
	600	355	194	137	90
	900	380	219	159	125
	1500	395	292	159	200
	2500	485	454	159	325
DN 200 (NPS 8)	150	345	127		45
	300	380	152	127	75
	600	420	219	165	160
	900	470	254	206	210
	1500	485	340	206	335
	2500	550	489	206	750
DN 250 (NPS 10)	150	405	146		62
	300	445	178	146	115
	600	510	244	213	230
	900	545	267	241	300
	1500	585	387	248	575
	2500	675	622	254	1125
DN 300 (NPS 12)	150	485	181		105
	300	520	181		160
	600	560	229		275
	900	610	292		425
	1500	675	435	305	885
	2500	760	686	305	1875
DN 350 (NPS 60)	150	535	184		125
	300	585	222		225
	600	605	273		355
	900	640	356		525
	1500	750	476	356	1115

SIZE N.B.	ANSI RATING	DIMENSIONS (mm)			Double Flanged Valve Weight Aprox. (Kg.)
		A (Flange OD)	B (Face to Face)		
			Double Flanged	Wafer/ Lugged	
DN 400 (NPS 16)	150	595	190		170
	300	650	232		275
	600	685	305		190
	900	705	384		675
	1500	825	537	384	1550
DN 450 (NPS 18)	150	635	203		190
	300	710	264		350
	600	745	362		600
	900	785	451		925
	1500	915	565	468	1720
DN 500 (NPS 20)	150	700	219		250
	300	775	292		470
	600	815	368		790
	900	855	451		1100
	1500	985	629	533	1950
DN 600 (NPS 24)	150	815	222		350
	300	915	318		690
	600	940	438		1250
	900	1040	495		1930
	1500	1170	733	559	2240
DN 700 (NPS 28)	150	925	305		575
	300	1035	368		1125
	600	1075	505		1820
DN 750 (NPS 30)	150	985	305		720
	300	1090	368		1245
	600	1130	505		2245
	900	1230	635		3365
DN 800 (NPS 32)	150	1060	356		810
	300	1150	368		1390
	600	1195	580		2755
DN 900 (NPS 36)	150	1170	368		1090
	300	1270	483		1815
	600	1315	635		3250
DN 1000 (NPS 40)	150	1290	432		1470
	300	1240	546		1985
DN 1200 (NPS 80)	150	1510	524		2285
	300	1465	629		3320
DN 1300 (NPS 52)	150	1625	524		3010
DN 1400 (NPS 56)	150	1745	625		4150
DN 1500 (NPS 56)	150	1855	660		4785

* Face-to-face dimensions are to manufacturer's standard. For other size & ratings API 594 is referred.

** Hub diameter (A) above are to suit ANSI B16.5, MSS-SP-44 and ANSI B16.47 series A dimension. Upto 24" Flanged Standard ASME B16.5 and above ASME B16 47A/B. This can also be supplied to suit flange dimensions as per BS 1560, JIS, IS or any other standard as per buyer's specifications.

*** For other sizes and pressure class ANSI 2500, details available on request.

All dimensions are subject to change without notice. Please check with manufacturer.

Approximate Weights

Advance Dual Plate Valve

(MODEL AV-WP-II WAFER TYPE)

TABLE 5

SIZES NB (DN)	Weight in Kgs.			
	ASME 125	ASME 150	ASME 300	ASME 600
50	1.8	2.7	3.2	3.2
65	2.7	3.5	5.0	5.0
80	3.2	4.5	6.8	6.8
100	5.4	6.7	8.2	11.8
125	6.8	10.2	15.9	22.7
150	9.0	16.0	20.0	36.0
200	18.0	26.0	37.0	61.0
250	29.0	40.0	57.0	108.0
300	50.0	78.0	91.0	151.0
350	90.0	100.0	147.0	206.0
400	116.0	125.0	188.0	290.0
450	135.0	143.0	260.0	404.0

SIZES NB (DN)	Weight in Kgs.			
	ASME 125	ASME 150	ASME 300	ASME 600
500	172	197	329	508
550	240	260	450	-
600	261	281	499	-
650	396	396	-	-
700	400	527	-	-
750	550	580	-	-
800	650	700	-	-
850	700	750	-	-
900	840	890	-	-
1000	1143	1143	-	-
1050	1270	1270	-	-
1200	1778	1778	-	-

For other models and sizes weights can be provided on request.

Installation Instructions

(1) CLEANING

The ends of Dual Plate Check Valves are protected b rust-proofing oil. Before installation, clean the same. Valve plates should be checked to ensure they are free of rust/oil.

(2) DIRECTION OF FLOW

The ends of flow in the line should coincide with the flow direction indicated by the “arrow” cast on the body of the valve as well as marked on the name plate.

(3) HORIZONTAL PIPING

Insert the valve into the pipeline so that the Pin Retainers (Plugs) are placed in an up and down position.

(4) DISTANCE BETWEEN DUAL PLATE CHECK VALVE & BUTTERFLY

When you attach a Butterfly valve to the outlet side of the Dual Plate Check Valve, ensure that there is enough distance between the two valves so that the plates of the Dual Plate Check Valve are in the open position Also, the disc of the Butterfly Valve should not enter the Dual Plate Check Valve. Besides this, maintain sufficient distance to avoid any peripheral or abnormal flow conditions.

(5) ORIENTATION OF THE VALVE TO PUMP DISCHARGE

When connecting the Dual Plate check Valve to the pump, connect so that the flow of the pump meets evenly with the two plates of the valve for best results.

(6) As a standard, the valves are designed to operate optimally in fully open condition at pipe line flow velocity of 2 to 2.7 m/sec of water for horizontal applications. The flow velocity for vertical applications may be slightly higher than the horizontal applications. For other fluids with lesser specific gravity, please furnish details at the time of enquiry.

(7) Refer to the company for cyclic flow applications like outlet of reciprocating machines.

(8) Dual Plate Check Valves are recommended to be installed where the flow velocities across the cross-section are uniform.

Colour Code

Unless otherwise specified, the exterior surfaces of valve bodies shall be painted as follows:

Carbon & Low Alloy Steel	:	Aluminum
Cast Iron	:	Black
Ductile Iron	:	Green
Austenitic Steel (SS)	:	Unpainted

Next Generation Non-Slam Check Valve





Salient Features:

- Non slam, axially operated.
- Designed as per ANSI B16.34.
- Self-operated, no external force required.
- High flow coefficient, low pressure drop.
- Quick response to change in flow direction.
- Metal seated, efficient tight shut-off sealing.
- Double Flange body design as standard, other end connections available.
- Zero emission.
- Maintenance-free.

Size Range	:	NPS 1 - 24 (DN 25 - DN 600)*
Pressure Rating	:	ASME CL 150 to CL 300
End Connection	:	Double Flanged as per ANSI B 16.5**
Face to Face Dimensions	:	Manufacturer's Standard. Please refer to table below.
Testing	:	As per API 598

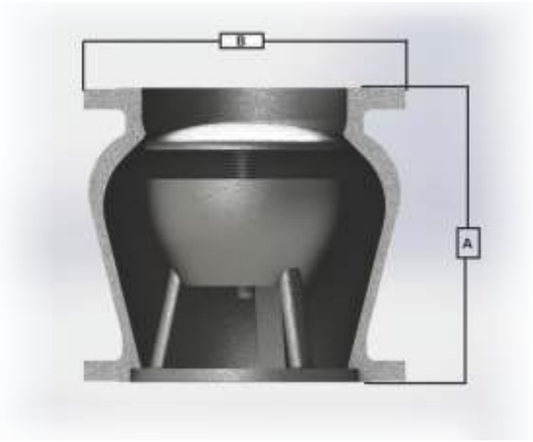

MATERIAL OF CONSTRUCTION***

Body	:	Carbon Steel
Disc	:	ASTM SS316 (Gr.CF8M)
Seat	:	ASTM SS316, stellited
Spring	:	SS316
Guiding Bush	:	SS316
Diffuser	:	Carbon Steel

Note:

* *Contact us for sizes > NPS 24 (DN 600) as well as for pressure rating >ASME CL 300.*

** *Other end connections available on request.*

*** *Other materials are available on request.*

TABLE OF INSTALLATION (DN)

VALVE SIZE	CL 150			CL 300		
	A (Face to Face)	B (Flange OD)	VALVE WEIGHT APPROX. (KG)	A (Face to Face)	B (Flange OD)	VALVE WEIGHT APPROX. (KG)
50	120	150	7	120	165	9
80	120	190	13	150	210	20
100	140	230	19	170	255	34
150	210	280	36	210	320	59
200	280	345	66	280	380	99
250	350	405	122	350	445	175
300	425	485	175	435	520	255
400	545	595	319	545	650	486
600	810	815	846	810	915	1332

Note: All dimension are in DN.







RANGE & APPLICATIONS

Type	Size Range	Rating	Design & Qualification	Application
Dual Plate Check Valve - Retainerless Wafer, Lugged, Flanged	DN 50 - 2000 NPS 2 - 80	ASME CL 125 - 2500	API 594, API 6D, API 6FA, BS 6364 / ISO 5752, ISO 28921, ISO 10497	All Services including Cryogenic & Fire Safe, -196°C (-321°F) to 750°C (1382°F)
Axial Flow Check Valve Flanged	DN 25 - 1600 NPS 2 - 64	ASME CL 150 - 1500	ASME B16.34, API 6D	All Services including Cryogenic & Fire Safe, -196°C (-321°F) to 750°C (1382°F)
Butterfly Valve - Triple Offset Metal Seated Wafer, Lugged, Flanged	DN 80 - 3000 NPS 3 - 120	ASME CL 150 - 1500	API 609 Category B, API 607, API 641 ISO 5752, ISO 15848, BS 6364, ISO 28921, ISO 10497, SIL 3	All Services including Cryogenic & Fire Safe, -196°C (-321°F) to 750°C (1382°F)
Butterfly Valve - Double Offset High Performance Wafer, Lugged, Flanged	DN 80 - 3000 NPS 3 - 120	PN 10 - 25 ASME CL 150 - 300	API 609 Category B, BS EN 593, ISO 5752, IS 13095, AWWA C504/516	Water, Chemicals, Air, Oil, Gases up-to 200°C (392°F), Vacuum
Butterfly Valve - Concentric Integrally Molded Liner	DN 50 - 1200 NPS 2 - 48	PN 10 - 20 ASME CL 150	API 609 Category A, BS EN 593, IS 13095, UL 1991	Water, Chemicals, Air, Oil, Gases up-to 200°C (392°F), Vacuum
Butterfly Valve - Concentric Low Torque Replaceable Liner	DN 50 - 300 NPS 2 - 12	PN 10	API 609 Category A, BS EN 593 IS 13095	Water, Chemicals, Air, Oil, Gases -20°C to 120°C
Actuated Butterfly On-Off / Modulating	DN 50 - 3000 NPS 2 - 120	PN 10 - 16 ASME CL 150 - 1500	API 609 Category A & B, SIL 3	Electric, Pneumatic, Electro-Hydraulic Hydraulic, Controls & Accessories
Balancing Valve	DN 25 - 1200 NPS 1 - 48	PN 10 - 25	DIN 3202, BS 7350, BS EN 593 Face to Face - ISO 5752 Table 8	Water, Glycol, Brine Solution

mindadvertising.co
MKT:C:03/Issue No.03/Rev.00/July 2019

ADVANCE VALVES

• ADVANCE VALVES PVT. LTD. • ADVANCE VALVES GLOBAL LLP • ADVANCE VALVES SOLUTIONS

Corporate Office: 142, A&B, NSEZ, Phase-2, Noida – 201305, INDIA. Phone: +91 120 4796900, Fax: +91 120 4796948

info@advancevalves.com

www.advancevalves.com