Easyflex™

Bellows & Expansion Joints

KANWAL

For big relief from stress at pipe flanges!

Expansion Joints or Compensators are flexible rubber elements (combined with metal and/or textile reinforcements) useful for conveying fluids and absorbing movements between sections or pipeline. With a correct design they are able to absorb axial, lateral and angular movements offering both safety and insulation against noise and vibrations.

We offer the market the most comprehensive selection of rubber expansion joints, covering the widest range of applications and dimension. By adapting the latest rubber and fabric technology, Kanwal Industrial Corporation can provide the most effective solutions to suit the required needs for any pipe systems.



Floating Flange



Single Arch

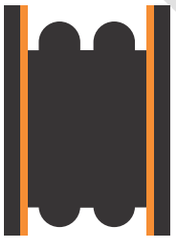

Double Arch



U Type

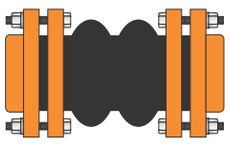

Twin Sphere Connector

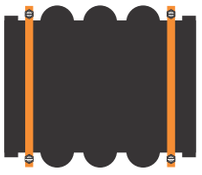

Triple Arch

Outstanding Advantages

- Variety of polymers available
- Internationally approved design as per FSA and EJMA USA
- Positive sealing for leak free operation
- Eliminates stress or expansion & contraction
- Compensates for misalignment-axial, lateral, angular & torsional
- Absorbs vibration & shock
- Eliminates line noise
- Prevents pipe buckling & fracture
- Prevents electrolytic corrosion
- Stops water hammer
- Low deformation under pressure
- Greater recovery from movement
- Abrasion, water, heat, chemical, weather resistant Resistant to fatigue
- Negligible loss of heat

Wide Range Standard Size Available Ex-Stock



Concentric



Eccentric



Rectangular



- Due to policy of continual improvement, the specifications are subject to change without prior notice.
- Measurements are subject to 5% tolerance.
- To achieve good results do not over load fitting more than designed parameters as per drawing / catalogue.
- Compliance - As per FSA Standards USA.

Easyflex™

How A Rubber Expansion Joint works

KANWAL

The purpose of an Expansion Joint in general, regardless of design or materials of construction, is to provide a point of flexibility in a piping or duct system in order to absorb the growth of the piping due to thermal changes in the media and/or the environment, and to absorb the dynamic movements of machinery, buildings and structures that the piping is attached to or a part of.

The Rubber Expansion Joint, because of the non-metallic nature of its construction, offers the piping and ductwork designer advantages within the temperature and pressure ranges of these joints, which cannot be matched by all metal expansion, joints.

Consisting of flanged ends and a flexible section, much the same as a flanged metal bellows, the rubber expansion joint can absorb within its free length more movements, particularly lateral, than any other joint of similar overall size and pressure rating.

The flexible section of a Rubber Expansion Joints is most often a single convolution, which, because of the inherent flexibility of the materials, can accept large lateral movements with low force, a phenomena which requires multiple convolutions in metal bellows. During axial and angular movements, the rubber convolution deflects much the same way that the metal convolution does. The limits of these motions are determined by the geometric shape and size of the convolution and the inherent pressure resisting capacity of the design.

The manner in which the pressure loads are resisted in a Rubber Expansion Joint is the major difference between Rubber and Metal Bellows. Circumferential (hoop) loads due to pressure are carried by the convolution itself in metallic bellows. In a Rubber Expansion Joint, the convolution is basically incapable of resisting pressure by itself, but is supported by the adjacent rubber tube with its internal fabric and/or fabric - metal reinforcing, or by the attachment flanges themselves.

All Easyflex Units have integrally molded flanges, sized and drilled to match standard flanges. All Rubber Expansion Joints require metallic split retaining rings behind the flanges to back up protect the rubber integral flange. Control rods must be used to protect expansion joints from excessive movement if piping system is not properly anchored and are normally recommended for most piping installations.

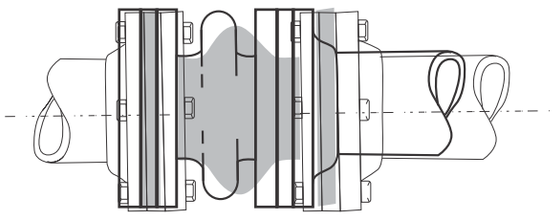

AXIAL
compression

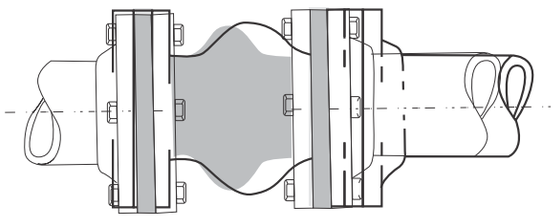

AXIAL
extension

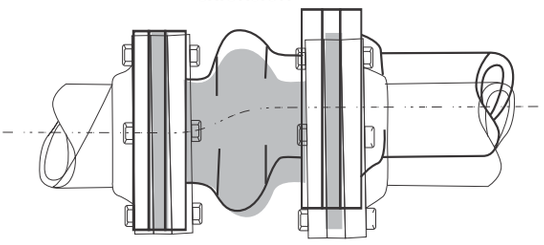

LATERAL
shear or perpendicular to centerline

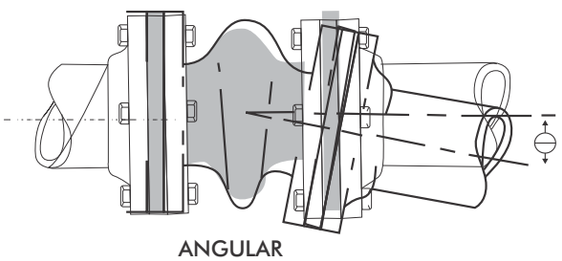

ANGULAR
bending of the centerline

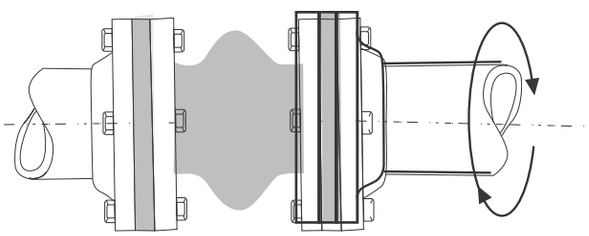

TORSIONAL
rotation about the centerline, twist

- Due to policy of continual improvement, the specifications are subject to change without prior notice.
- Measurements are subject to 5% tolerance.
- To achieve good results do not over load fitting more than designed parameters as per drawing / catalogue.
- Compliance - As per FSA Standards USA.

Easyflex™ Single Arch Flexible Connectors

- Greater Movements.
- Higher Pressure Ratings.
- No gaskets required.
- Absorbs & Isolates Vibrations/Noise/Shock.
- Molded Design for better quality upto size 14" NB.
- Reduces System Noise.
- Absorbs Pipe Movement/Stress.
- Compensates for Misalignment/Offset.
- Available with tie rod assembly (Specially Recommended)
- Size from 25mm NB to 1800mm NB.
- Higher Pressure Ratings and Movement Capabilities Available.
- Flexible Connectors are available in a variety of polymers for different applications duty conditions.
- Please refer to our engineering department for special duty conditions/polymers.



Temperature Ratings

Maximum Temperature - 115°C

* **Bellow Material -** Neoprene, EPDM, Nitrile

* Flexible Connectors for special applications in different Polymers and pressure ratings available as per customer specifications.

Compliance - ASTM F 1123-87 (2004). Testing as per Fluid Sealing Association standard FSA-PSJ-701-06.

Movement Capability

Nominal Bore (mm)	Length (mm)	Axial Corp. (mm)	Axial Elongation (mm)	Transverse Deflection (mm)	Angular Movement Deg.	Torsional Movement Deg.
20	125	12	6	12	14.5	3
25	125	12	6	12	14.5	3
32	150	12	6	12	14.5	3
40	150	12	6	12	14.5	3
50	150	12	6	12	14.5	3
65	150	12	6	12	12.5	3
80	150	12	6	12	10	3
100	150	12	6	12	7.5	3
125	150	12	6	12	6	3
150	150	12	6	12	5	3
200	150	12	6	12	5	3
250	200	19	10	12	4	3
300	200	19	10	12	4	3
350	200	19	10	12	2.5	2
400	300	19	10	12	2.5	2
500	300	19	10	12	2	1
550	300	22	11	12	2	1
600	300	22	11	12	2	1
650 - 750	300	25	12	12	2	1
850 - 1000	300	25	12	12	1.5	1
1050 - 1800	300	25	12	12	1.5	1

*Standard PN10 and PN16 REJ design chart for sizes 25NB to 350NB available on next page

- Due to policy of continual improvement, the specifications are subject to change without prior notice.
- Measurements are subject to 5% tolerance.
- To achieve good results do not over load fitting more than designed parameters as per drawing / catalogue.
- Compliance - As per FSA Standards USA.

Easyflex™ Single Arch Flexible Connectors

PN - 10

Nominal Size (I.D.)		Length Nominal f.f.	Flange Dia Nominal	BS 10 Table D			ANSI 125/150# LBS			Operating Conditions	
				Hole Dia	No. of Holes	B.C.D. (Approx)	Hole Dia	No. of Holes	B.C.D. (Approx)		
INS.	MM	MM	MM	MM	NOS.	MM	MM	NOS.	MM	Pressure Design	Test Pressure
3/4	20	125	114	14	4	83	16	4	79	10 Bar	15 Bar
1	25	125	114	14	4	83	16	4	79	10 Bar	15 Bar
1.25	32	150	121	14	4	87	16	4	89	10 Bar	15 Bar
1.5	40	150	126	14	4	98	16	4	98	10 Bar	15 Bar
2	50	150	152	18	4	114	19	4	121	10 Bar	15 Bar
2.5	65	150	178	18	4	127	19	4	140	10 Bar	15 Bar
3	80	150	191	18	4	146	19	4	152	10 Bar	15 Bar
4	100	150	229	18	4	178	19	8	191	10 Bar	15 Bar
5	125	150	254	18	8	210	22	8	216	10 Bar	15 Bar
6	150	150	279	18	8	235	22	8	241	10 Bar	15 Bar
8	200	150	343	18	8	292	22	8	298	10 Bar	15 Bar
10	250	200	406	21	8	356	25	12	362	10 Bar	15 Bar
12	300	200	483	21	12	406	25	12	432	10 Bar	15 Bar
14	350	200	533	24	12	470	28	12	476	10 Bar	15 Bar
16	400	300	597	25	12	521	28	16	540	10 Bar	15 Bar
18	450	300	635	25	12	584	32	16	578	10 Bar	15 Bar
20	500	300	699	25	16	641	32	20	635	10 Bar	15 Bar
24	600	300	813	29	16	756	35	20	749	10 Bar	15 Bar

PN - 16

Nominal Size (I.D.)		Length Nominal f.f.	Flange Dia Nominal	BS 10 Table E			ANSI 125/150# LBS			Operating Conditions	
				Hole Dia	No. of Holes	B.C.D. (Approx)	Hole Dia	No. of Holes	B.C.D. (Approx)		
INS.	MM	MM	MM	MM	NOS.	MM	MM	NOS.	MM	Pressure Design	Test Pressure
3/4	20	125	114	16	4	83	16	4	79	16 Bar	24 Bar
1	25	125	114	16	4	83	16	4	79	16 Bar	24 Bar
1.25	32	150	121	16	4	87	16	4	89	16 Bar	24 Bar
1.5	40	150	126	16	4	98	16	4	98	16 Bar	24 Bar
2	50	150	152	19	4	114	19	4	121	16 Bar	24 Bar
2.5	65	150	178	19	4	127	19	4	140	16 Bar	24 Bar
3	80	150	191	19	4	146	19	4	152	16 Bar	24 Bar
4	100	150	229	19	8	178	19	8	191	16 Bar	24 Bar
5	125	150	254	19	8	210	22	8	216	16 Bar	24 Bar
6	150	150	279	22	8	235	22	8	241	16 Bar	24 Bar
8	200	150	343	22	8	292	22	8	298	16 Bar	24 Bar
10	250	200	406	22	12	356	25	12	362	16 Bar	24 Bar
12	300	200	483	25	12	406	25	12	432	16 Bar	24 Bar
14	350	200	533	25	12	470	28	12	476	16 Bar	24 Bar
16	400	300	597	25	12	521	28	16	540	16 Bar	24 Bar
18	450	300	635	25	16	584	32	16	578	16 Bar	24 Bar
20	500	300	699	25	16	641	32	20	635	16 Bar	24 Bar
24	600	300	813	32	16	756	35	20	749	16 Bar	24 Bar

- Due to policy of continual improvement, the specifications are subject to change without prior notice.
- Measurements are subject to 5% tolerance.
- To achieve good results do not over load fitting more than designed parameters as per drawing / catalogue.
- Compliance - As per FSA Standards USA.

Easyflex™ Control Unit Instructions

Why Control Units are Required

- Lack of Proper pipe anchors - Initial surge of pump at an elbow may cause hyper-extension.
- Lack of proper pipe supports - Easyflex expansion joints and vibration dampeners are not designed to support the weight of the piping system.
- Lack of proper alignment guides - Control rods will prevent lateral movement beyond design specifications.
- Wide fluctuations of temperature - The changing from hot to cold media may cause excessive expansion or contraction even when the pipe is properly anchored.
- Testing at elevated pressures - The use of anchors and/or control rods is required to offset the thrust.

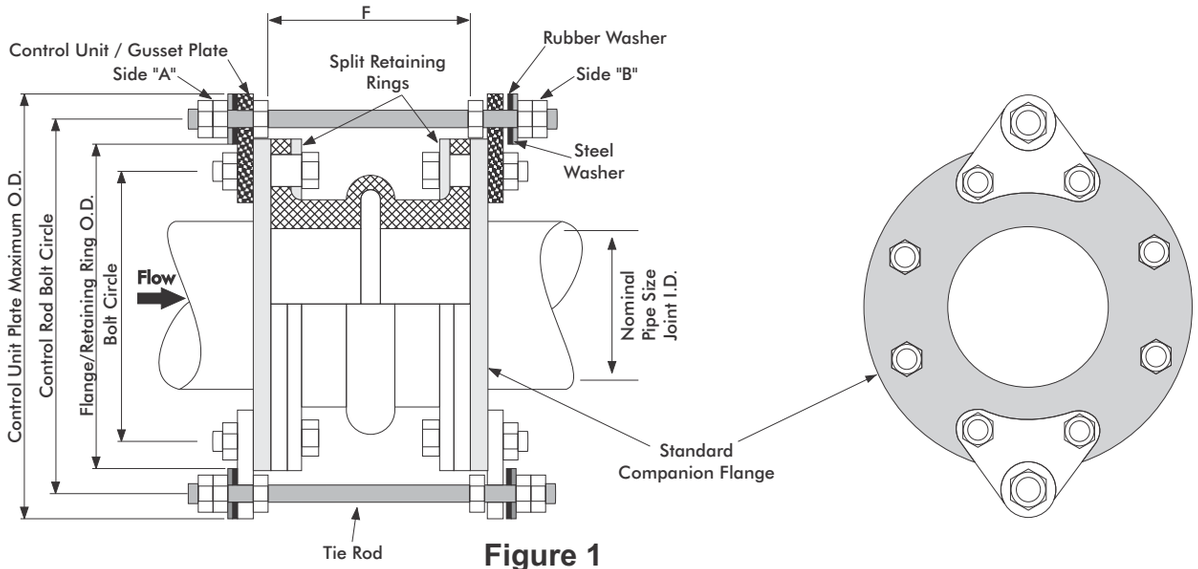

Figure 1

Pre-Installation Check List

- Compare the requirements of the system to ensure the proper number of control rods have been specified. (Minimum of two (2) required.)
- Check Control Units to be sure all parts are included. The unit consists of minimum four (4) gusset plates, two (2) tie rods with six (6) nuts and six (6) metal / rubber washers. For bigger sizes and higher pressures the quantities might increase. Contact our Engg. Dept. or refer drawing.

Installation

- Bolt the control unit plates to the outer side of the Companion flanges at the same time while the bolt is being installed through the split retaining ring / rubber flange / companion flange and the control unit / gusset plates. They are to be equally spaced around the circumference of the flange.
- Install the tie rod through the top hole in each gusset plate after placing rubber/metal washer on either side of the gusset plate. (See illustration above.)
- Tighten the first two nuts ("A" location) in the direction of flow tightly. Check the recommended movement for the particular size from our catalogue and keep the second set of nuts ("B" location) loose accordingly. The second check nut should be tightened keeping space/gap for movement capability.

  Note :
  If excessive compression exists, optional compression sleeves should be specified. The compression sleeves will limit the compression to the maximum allowable movement.

- Due to policy of continual improvement, the specifications are subject to change without prior notice.
- Measurements are subject to 5% tolerance.
- To achieve good results do not over load fitting more than designed parameters as per drawing / catalogue.
- Compliance - As per FSA Standards USA.

Easyflex™ Construction Features

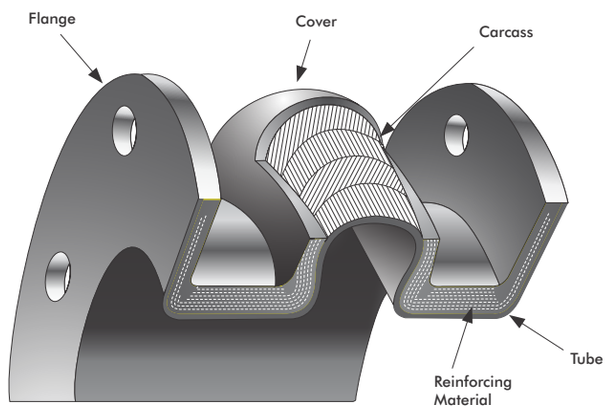



*** other polymers (EPDM, NITRILE, SILICON, BUTYL, Hypalon) also available on request**

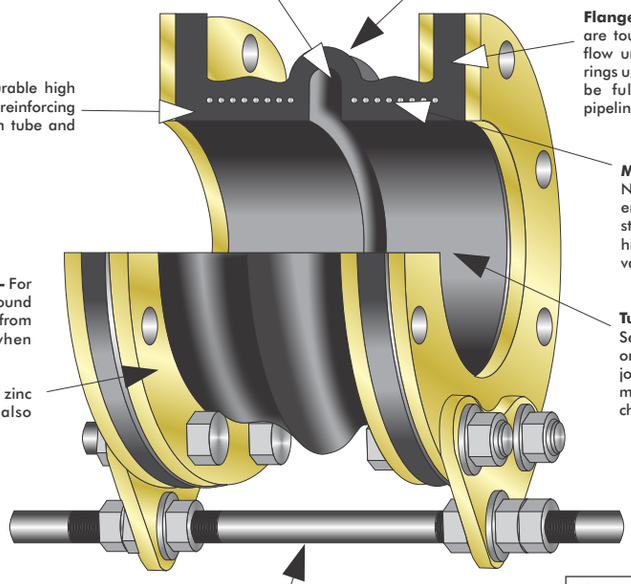

Arches - Can be filed If required, to avoid accumulation of sediment and to provide a smooth bore. However flexibility of joint is reduced by 50%

Cover - To protect body from atmospheric conditions or mechanical damages. NEOPRENE rubber is standard for weather, heat & oil resistance and long service life

Flanges - Full faced integral with tube - are tough and non-compressbleto reset flow under bolting pressure, having 'O' rings upto 12" nominal bore which should be fully flattened when installed in pipeline No Gaskets are required

Carcass - Consists layers of durable high tensile nylon/polyester cord for reinforcing the supporting member between tube and cover.

Metal Reinforcements - Non-migrating metal rings are embedded in the body for extra strength, higher safety factor higher pressure and rigidity for vacuum service.

Metal Retaining Rings (standard) - For distributing the bolting pressure around the flanges and to prevent the bolts from damaging the Rubber flanges when tightened.

Steel rings are split, beveled and zinc electroplated. Galvanized rings also available.

Tube - Leakproof, Abrasion resistant Seamless lining of Rubber (synthetic or natural) is selected to ensure that joint will not be affected by passing medium (e.g., air, water, oil, gas, acid or chemicals)

Also Available - Companion Flanges, Fixing Bolts, Nuts and Washers, Fixing Tool & Tackles.

Control Rods (recommended) - To prevent damage to expansion joints by excessive elongation or compression of piping systems not anchored property

- Due to policy of continual improvement, the specifications are subject to change without prior notice.
- Measurements are subject to 5% tolerance.
- To achieve good results do not over load fitting more than designed parameters as per drawing / catalogue.
- Compliance - As per FSA Standards USA.

Easyflex™ Typical Installations

Typical Piping Layout Utilizing Expansion Joint When Equipment and Piping are properly Anchored

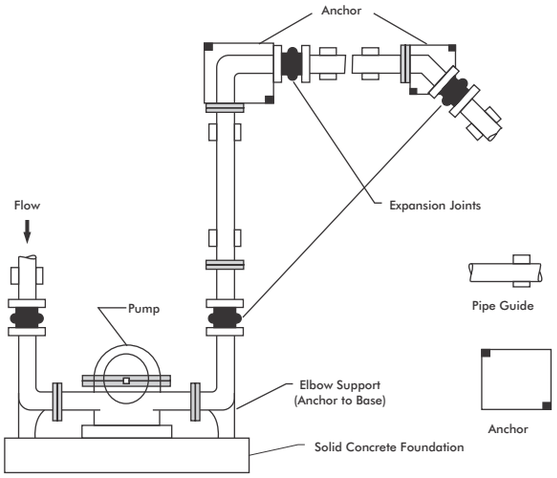

Typical Piping Layout showing the use of Control Units with the Expansion Joint when proper System Anchoring is Limited

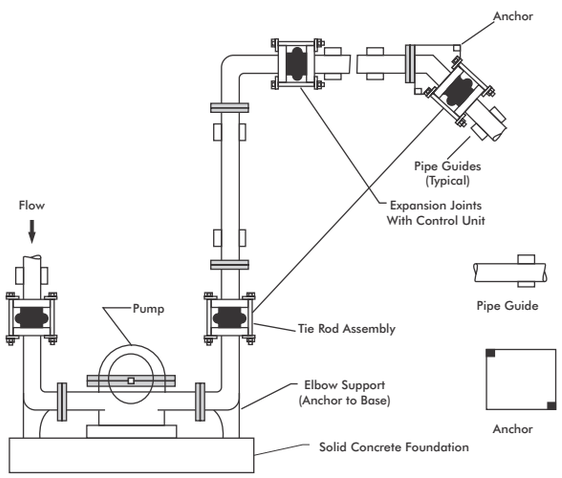

Use of an Inertia Base for Pump and Piping

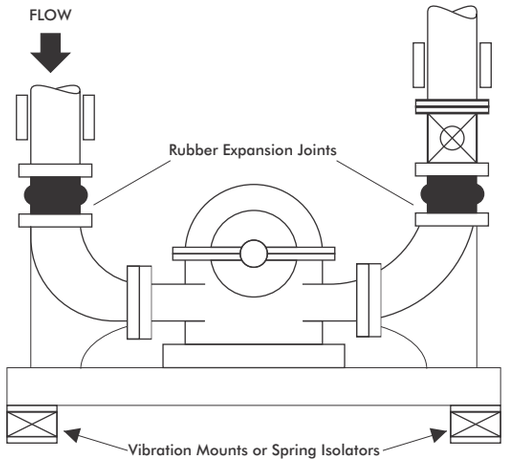

Superior Installation With Pump Base Independently Supported by Anchors

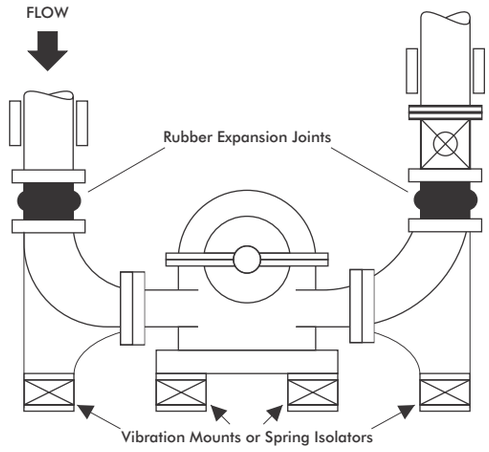

Typical Piping Layout Utilizing Expansion Joints and proper use of Anchors in Branch Locations

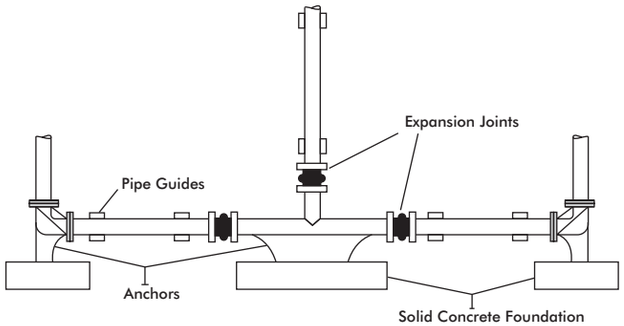

Typical Pump Installation With Expansion Joints Utilizing Vibration Mounts

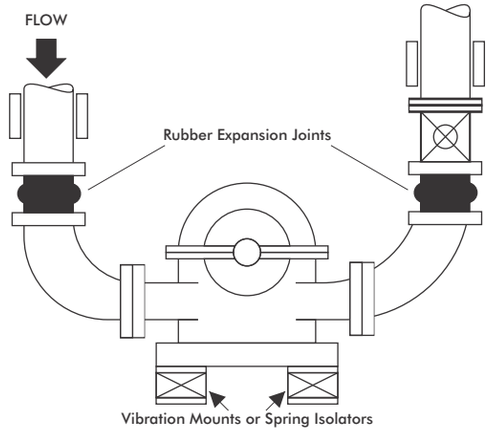

- Due to policy of continual improvement, the specifications are subject to change without prior notice.
- Measurements are subject to 5% tolerance.
- To achieve good results do not over load fitting more than designed parameters as per drawing / catalogue.
- Compliance - As per FSA Standards USA.

Easyflex™ Installation Instructions

Site Pre Installation Check & Instructions

- Is type of Bellow/Joint correct for application.
- Check maximum service temperature does not exceed maximum temperature specified in catalogue.
- Are anchors suitable for the thrust generated.
- Does pipework have adequate guiding and support.
- Cold test pressure must not exceed 1.5 times the working pressure.
- Area of movement of the joint must be free from obstruction.
- Do not paint the rubber bellows/expansion joints (the outer cover is fully waterproof.)

Fitting Instructions

The necessary steps for installing all expansion joints should be pre-planned. The installers should be made aware of these steps as well as the special instructions furnished with the expansion joint by the manufacturer, which will provide information necessary for proper handling and installation of expansion joints. The most critical phases of the expansion joint installation are as follows :

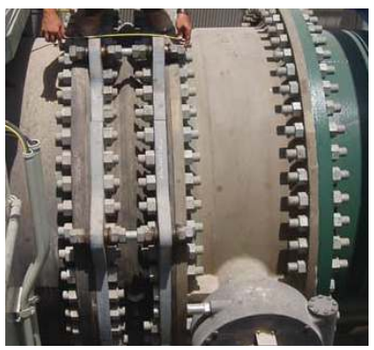

- The installed length of the bellow in between the companion flanges should be equivalent to the over all length as per the Invoice.
- No movement of the expansion joint (compression, extension, lateral offset, rotation) due to piping misalignment, for example, shall be imposed which has not been anticipated and designed into the movement capability of the expansion joint. Imposing such movements can result in systems malfunction or damage to the bellows or other components in the system. Specifically cycle life can be substantially reduced where forces imposed by attached equipment may exceed their designed limits, internal sleeve clearances may be adversely affected, and the pressure capacity and stability of the bellow may be reduced.
- Anchors, guides, and pipe supports shall be installed in strict accordance with the piping systems drawings. Any field variances from planned installation may affect proper functioning of the expansion joint and must be brought to the attention of competent design authority for resolution.
  Mating flanges must be smooth and must extend to the bore of the bellow/joint e.g. 100mm NB must be 100mm internal bore. There must be no grooves, protrusions or sharp edges applied to the rubber bellows/joint face.
- Flange bolts should be located with their heads on the expansion joint side of the flange. If this location is not possible 10mm clearance must be made between the bolt and bellow/joint body.
- Tighten bolts crosswise (not in rotation).
- Protection for the body must be provided when welding in the vicinity of the rubber bellow/joint.

Post Installation inspection :

A careful inspection of the entire piping system shall be made with particular emphasis on the following:

- Are anchors, guides and supports installed in accordance with the system drawings.
- Is the expansion joint in the proper location and is the installed length correct and have the control units been installed properly (Please refer to our catalogue).
- Are all guides, pipe supports and the expansion joints free to permit pipe movement.
- Are any expansion joints misaligned? Measuring the joint overall length and checking clearances at critical points on the expansion joint and at other points in the system can determine this.

- Due to policy of continual improvement, the specifications are subject to change without prior notice.
- Measurements are subject to 5% tolerance.
- To achieve good results do not over load fitting more than designed parameters as per drawing / catalogue.
- Compliance - As per FSA Standards USA.